All-in-one permanent-magnet low-voltage synchronous servo unit

High Speed, Low Noise, Low Power Consumption

Our all-in-one low-voltage AC servo unit, integrating a low-voltage permanent-magnet synchronous servo motor, a fully digital space vector driver and our up-to-date magnetic position detection technology, requires the least wiring, which helps achieve a small size, easy use and weak electromagnetic interference from the wires. The 32-bit digital signal processing (DSP) chip-based drive platform adopts a motor control algorithm based on a fully digital space vector algorithm, and supports MODBUS_RTU (or CAN OPEN) communication network control, making multi-shaft network construction very simple.

Features

- A fully digital all-in-one AC servo unit based on a 32-bit DSP platform;
- Single-group DC powered;
- Support to optocoupler-isolation-based pulse input, direction control input and alarm output;
- The R series adopting 485 bus supports MODBUS_RTU protocol and can maximally drive 32 load devices;
- The C series adopting CAN bus supports CAN-OPEN protocol and can maximally drive 127 load devices; its maximum baud rate is 1M;
- The built-in single-shaft motion control function supports point-to-point position control mode, speed control mode and cyclic position synchronization control mode;
- The magnetic-field position detection technology used for controlling the rotor's rotation direction has a better resistance to dust and vibration;

Electrical Parameters

	ISM40x005C		ISM60x018C
Ordering code	023063		023064
Power supply	24V, capacity bigger than 0.1KVA		48V, capacity bigger than 0.3KVA
Rated power	50W		180W
Rated speed	3000 rpm		
Rated torque	0.16 N.m	0.6 N.m	
Logic input voltage	5V TTL		
Pulse command frequency	500KHz(MAX)		
Insulation resistance	＞100MΩ (at a normal temperature and normal pressure)		
Dielectric strength	500V, 1Min (at a normal temperature and normal pressure)		

Service Environment and Parameters

Cooling method		Natural convection (forced fan cooling can be used when necessary)
Service environment	Precaution	Dust, oil mist and erosive gases shall be removed as much as possible.
	Temperature	－5℃～+40℃
	Humidity	＜80%RH, without condensation and frost formation
	Vibration	5.9m/s^2 Max
Storage environment	Temperature	－20℃～+55℃
	Humidity	＜93%RH, without condensation and frost formation
External dimensions	ISM40x005C	Shaft: 8mm spigot: 30mm machine body length: 78mm
	ISM60x018C	Shaft: 14mm spigot: 50mm machine body length: 125mm
Weight		0.4Kg(ISM40x005C) 1.3Kg (ISM60x018C)

Description of Model Naming

ISM 40 R 005 C A

Design version	
Rated speed	C:3000RPM
Rated power	005: 50W 018: 180W
Communication mode	R: RS485 C: CAN-OPEN
Machine base No.	40mm 60mm
Model code	Integrated low-voltage servo

Wiring Definitions

- Type of cables to be used

  The all-in-one servo unit's cable connection is achieved via plug-type interfaces that employ a screw-free spring-pressure connecting method to improve their vibration resistance; for 9-cable interfaces, the cable section area shall be 0.2~0.5 mm^2; for 2-cable power supply interfaces (ISM60), the cable section area shall be 1~1.5 mm2. Before being used for installation, the cable terminals shall go through cold-press forming or tin plating to avoid faults due to individual unfixed wires going out from any two cables next to each other. After putting any cable into its designated hole in the interface, pull it to confirm it's reliably locked. Take care to avoid excessive stress on or frequent bending of any cable. Adhesive may be infused for cable fixing after the cable is connected into the interface;

ISM40 Interface definition	1	2	3	4	5	6	7	8	9
	24V-	24V+	485B/ CANH	485A/ CANL	ALM-	ALM+	COM	DIR	STEP
ISM60 Interface definition	1	2	3	4	5	6	7	8	9
	485B/ CANL	485B/ CANL	485A/ CANH	485A/ CANH	ALM-	ALM+	COM	DIR	STEP

- The servo unit is powered by a standard regulated DC power supply (24V (*24V-/24V+*) for ISM 40 interfaces, and 48V (*DC-/DC+*) for ISM60 interfaces). **Avoid reverse connection, or the all-in-one servo unit will be damaged**; the power supply's nominal capacity shall be greater than the motor's minimal nominal capacity (not less than 100W in case of IMS40, and not less than 300w in case of ISM60). As the current flowing in the power supply cables is big, it is

recommended to use big cables (such as 0.5mm^2 (for ISM40) and 1.0mm^2(for ISM60)). A low power supply voltage will affect the motor's power output, and an overly high power supply voltage will trigger alarming and the servo unit's shutdown. Due to the limited diameter of the interface's each hole, power supply cables should be connected to different holes in case of multi-shaft application; avoid series connection in that case.

Note: As the all-in-one servo unit's structural space is limited, no built-in discharge control circuit is supplied; in case of any application involving big feedback energy, please install a separate discharge module by yourself to keep the power supply voltage within the allowed range;

- R-series all-in-one servo units adopt physical-layer 485 communication (*485A/485B*) based on MODBUS_RTU protocol; the default station address set by the manufacturer is 1, and the default baud rate is 115,200. Through the communication function, the user can change values of the all-in-one servo unit's internal parameters, such as the current loop's, speed loop's or position loop's parameters, and communication parameters, and can also read the motor's current status. The built-in control function for single-shaft motion can also achieve automatic operation control of speed and position. For reliable communication, twisted-pair lines are recommended for connecting the motor and controller. Connecting the signal ground of 485 communication's main station and the all-in-one servo unit's power supply ground can help improve communication quality. For construction of a multi-unit network, series connection (chain-type network construction) can be used;

- Motor temperature rise: the temperature appropriate for the all-in-one servo unit's reliable work is under 65 ℃. Both an overly high load and an unfavorable operation environment can affect the motor's heat dissipation and then cause its temperature to rise; when the power unit's kernel temperature reaches 125 ℃, the motor will send alarm information through its ports; when the temperature rises further to 150℃, automatic shutdown will be triggered. So it is recommended to use extra cooling measures like fan cooling when necessary.

- Alarm output (*ALM-/ALM+*): alarm information will be given through these two ports in case of the all-in-one servo unit's fault alarm. The two ports adopt optocoupler isolation OC output, and their load current is not bigger than 20MA. The all-in-one servo unit gives alarm in case of undervoltage, overvoltage, overcurrent, overheating, overload, etc. The optocoupler's on/off status is used to indicate the motor's alarm status (for IMS60, a red LED is also used for alarm indication) — the "on" status means alarm occurs, and the user can access the concrete alarm information through communication;

- Pulse and direction commands are received through a common-anode pattern (*PLUS/DIR/COM*). The commands are single-pulse ones. The direction end's level controls the motor rotation direction; on the pulse end, its optocoupler's process from being off to being on is interpreted as receiving an effective pulse; the ports are part of a 5v (TTL)-level interface. External resistors shall be connected in series to PLUS and DIR ports for matching in case of use of other level signals. The pulse port's maximal response frequency is 500KHz. When using pulse/direction control for the motor's operation, take care to ensure the direction command is effectively established at least 2μs ahead of the pulse command;

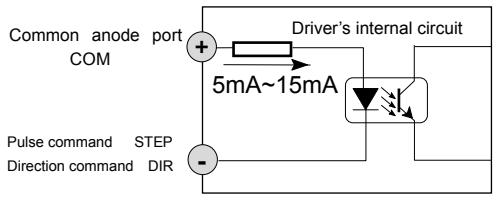

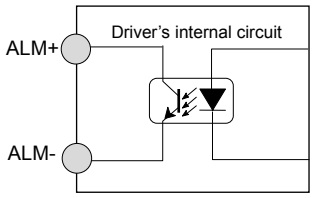

Description of RS485 Communication Protocol

- Communication transmission format: 8 bits for data (without check), and 1 stop bit.
- Ex-factory (default) baud rate value: 115,200; the baud rates of 9600,19200, 38400, 57600 and 115200 are supported; the user can change it by changing the driver's corresponding internal parameter; the parameter change will take effect only after its saving, and switching off and reswitching on of the servo unit's power. **Please do firmly remember the changed baud rate value**;
- Ex-factory (default) station address is 1. The all-in-one servo unit supports an address range of 1~255. The user can change the station address by changing the corresponding internal parameters. The parameter change will take effect only after its saving, and switching off and reswitching on of the servo unit's power. **Please do firmly remember the changed station address;**
- MODBUS_RTU basic data pack format

  Station address (Address) + Function code (Function, 8-bit) + Data field (Data, N X 8 bits) + CRC check code (Check, 16-bit)

  In a double-byte data field, the high byte precedes the low byte
- MODBUS_RTU function code

Function Code 01, for reading the coil's status

Example: Read status of the coil at the address of 0000 (double-byte, for run/stop control)

Main station request: 0x01 (station address, 1-byte) + 0x01 (function code, 1-byte) +0x0000(coil initial address, 2-byte) +0x0001(number of coils, 2-byte) +CRC

Slave station response: 0x01(station address, 1-byte) + 0x01(function code,1-byte) +0x01(byte counting,1-byte) +0x00(coil status, 1-byte) + CRC

Slave station error report: 0x01(station address,1-byte) + 0x81(function code,1-byte) +0x01(exception code,1-byte) +CRC

Function Code 03, for reading a single register's status

Example: Read status of the register (double-byte) at the address of 0001

Main station request: 0x01(station address, 1-byte) + 0x03 (function code, 1-byte) + 0x0001(register's initial address, 2-byte) + 0x0001(number of registers, 2-byte) + CRC

Slave station response: 0x01(station address, 1-byte) + 0x03 (function code,1-byte) + 0x02(byte counting, 1-byte) + 0x55AA(register's data, 2-byte) + CRC

Slave station error report: 0x01(station address,1-byte)+0x83(function code,1-byte)+0x01(exception code,1-byte)+CRC

Function Code 05, for changing the coil's status

Example: Change status of Coil 0000 (for motion control), to start the motor's motion

Main station request: 0x01(station address,1-byte) + 0x05 (function code, 1-byte) + 0x0001(output address, 2-byte) + 0x0001(output value, 2-byte)+CRC

Slave station response: 0x01(station address, 1-byte) + 0x05(function code, 1-byte) +0x0001(output address, 2-byte) +0x0001(output value, 2-byte) +CRC

Slave station error report: 0x01(station address,1-byte) +0x85 (function code,1-byte) + 0x01(exception code,1-byte) +CRC

Function Code 06, for changing a single register

Example: Change content of the register at the address of 0001 (double-byte)

Main station request: 0x01(station address, 1-byte) + 0x06(function code,1-byte) +0x0001(register address, 2-byte) + 0x0002(the value to be changed in the register, 2-byte) + CRC

Slave station response: 0x01(station address, 1-byte) + 0x06(function code, 1-byte) +0x0001(register address, 2-byte) + 0x0002 (register's value, 2-byte) +CRC

Slave station error report: 0x01(station address,1-byte) + 86 (function code,1-byte) +01(exception code,1-byte) +CRC

- CRC check is achieved through a 16-bit CRC check code generated with a designated method as required by relevant standards

- Two methods for the driver's saving of parameters:

  Method 1: By keeping the parameter saving IO coil register (address: 2) = ON, the driver can save all parameters; value of the parameter saving status register (address: 206) indicates the driver's parameter saving status — 0 means saving is successful, 1 means saving is being performed, and 2 means saving has failed.

  Method 2: By changing value of the parameter saving register (as one of the command registers, parameter address: 15) to 1, the driver can save all the parameters.

- Restore the driver's default parameter values: By changing value of the parameter saving register (as one of the command registers, parameter address: 15) to 2806 and then reswitching on the driver's power, the user can restore the system's parameters to default values.

Description of RS485 Parameters

The all-in-one servo unit's MODBUS communication addresses are divided into command register section, status register section and IO coil command section. The command register section and IO coil command section can be read and written in through communication, and the status register section can only be read through communication. The following are the definitions and description of different register addresses:

Conditions for the parameter change to take effect:

Condition I: Parameter change takes effect immediately;

Condition II: Parameter change can take effect only when the motor is not running, which means the parameter change will take effect when the motion start IO coil register = OFF or the external IO (start signal) optocoupler is off

Condition III: Parameter change takes effect only after turning off and reswitching on of the servo unit

Address	Name	Value Range	Condition for the Change to Take Effect
Each command register is readable and writable; under the protocol, Function Code 03 is for reading register status, and Function Code 06/16 are for writing values into the registers			
0	Mode	0: internal tress test mode 1: speed mode 2:position synchronization cycle mode 3: point-to-point mode 4:internal test debugging mode 5: external pulse command mode	Change takes effect when Condition II is met
1	Rated current	5-40 (*0.1A)	As per motor parameter setting, change takes effect when Condition III is met
2	Number of steps per revolution	200~30000	Change (to be made by the user as per his need) takes effect when Condition III is met
3	Speed command	-3000, 3000 (rpm)	Under speed mode, change takes effect when Condition I is met; Under point-to-point mode, change takes effect when Condition II is met
4 5	Position command	Incremental/absolute (number of pulses)	F05 is the data's 16 high bits, and F04 the 16 low bits. When their values are defined by F02, the change takes effect when Condition II is met
6	Acceleration time	1-30000/ms	It defines the time needed by the motor for its acceleration from motionlessness to the commanded speed. Under speed mode, change takes effect when Condition I is met; under other modes, change takes effect when Condition II is met
7	Deceleration time	1-30000/ms	It defines the time needed by the motor for its deceleration from the commanded speed to motionlessness. Under speed mode, change takes effect when Condition I is met; under other modes, change takes effect when Condition II is met.
8	Number of motion cycle commands	0-30000	Under point-to-point mode, change takes effect immediately
9	Length of motion cycle wait	0-30000	The unit of time is determined by Register 0C. Change takes effect immediately
0A	Station address	1-247	Change takes effect when the servo unit is reswitched on
0B	Baud rate	1-5	1: 9600 bit/s 2: 19200 bit/s 3:38400 bit/s 4: 57600 bit/s 5:115200 bit/s Change takes effect when Condition III is met
0C	Unit of time	0: millisecond (s) 1: second (s)	Change takes effect when Condition III is met
0D	Position type	0: relative position 1: absolute position	Under default setting, absolute position is used, and change takes effect when Condition II is met
0E	Position synchronization cycle	1-30000ms	Default value =1. Change takes effect when Condition III is met
0F	Parameter saving	0-30000	When its set value is =1, the driver will save all parameters into the E2PROM, and change takes effect when Condition III is met
12	Password	0-30000	Change takes effect immediately. This parameter is for protecting kernel circuit parameters. Only when it is set as 1206 can the user change the speed gain/position gain
13	Speed loop integral gain	1-2000	It can be changed only when the motor is not enabled
14	Speed loop proportional gain	1-2000	
15	Current loop integral gain	1-2000	It is protected by the parameter protecting password, plus, its change may only be made when the motor is not enabled
16	Current loop proportional gain	1-2000	
17	Reserved		
The following addresses form the status register (read only). Reading of it is achieved through Function Code 03 under MODBUS protocol			
C8	Motor status	6: motor enabling 7: self test failure 9: undervoltage 10: overvoltage 11: E2PROM error 15 overcurrent 19 overload alarm 20 overheating 52 positional overtravel	
C9	Current speed	rpm	Motor's actual speed
CA CB	Current position	Absolute position (number of pulses)	
CC	Current mode		Current control mode

CD	Number of encoder lines		
CE	Status of parameter saving	0: Saving is completed 1: Saving is being performed 2: Saving has failed	
CF	Reserved		
D0	Number of completed cycles		
D1	Time already used for waiting		
D2	Driver station address		
D3	Position reached	0: Position is being reached 1: Position is reached	
DC	Load rate		Current load factor (Unit: 1 thousandth)
DD	Record of fault code history		Every 4 bits record one occurrence of fault. Record of the latest 4 occurrences of fault can be kept. The fault code history information is recorded on a cyclic basis
IO coil register (used for controlling coil switches through MODBUS protocol's Function Code 05). Function Code 01 is used for reading coil status; FF00=ON 0000=OFF			
0	Control of motor enabling	ON: The motor is enabled OFF: The motor is not enabled	The power is on by default (the parameter's corresponding value =ON); the motor is enabled, coil status
1	Start/Stop	OFF: Motion is stopped ON: Motion is started	
2	Parameter saving	ON: Parameter is saved OFF: Parameter is not saved	

Examples of RS485 Application Modes

- **Internal stress Test Mode (F00=0)**

Under this mode, the motor works in an open-loop stepping pattern, rotating continuously at a constant speed and in a single direction; the current's value is identical with its set value. This mode is only for stress test as part of the internal aging test.

- **Communication-controlled Speed Mode (F00=1)**

First, the user shall set values of relevant registers' communication parameters, and then control the start IO coil's status to control the motor's start and stop. Under this mode, the motor will run continuously as regulated by the parameter values set by the commands until a new command for stop arrives. By changing the speed, acceleration time and deceleration time, the user can change the motor's working parameters, and the change takes effect immediately;

Name	Mode	Set Speed (rpm)	Acceleration Time (ms)	Deceleration Time (ms)	Control of Start IO Coil or External IO Input
Address	F00	F03	F06	F07	1
Value	1	***	***	***	ON

- **Position Synchronization Command Mode (F00=2)**

Under Working Mode 2, the all-in-one servo unit can complete its motion under the upper control device's cyclic communication commands for synchronization, and finally fit the required complicated motion curve on a multi-stage basis by executing the upper device's position commands. During the set length of time of the position synchronization cycle, the motor will run at an average speed (calculated based on the position commands and synchronization cycle) without the process of acceleration or deceleration to complete the movement whose length is defined by the commands;

Name	Mode	Position Command	Position Synchronization Cycle	Start/stop Coil
Address	F00	F05~F04	F09	1
Value	2	***	***	ON

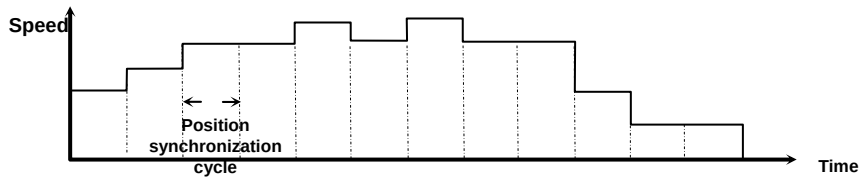

● **Point-to-point Position Mode (F00=3)**

Under Working Mode 3, the user shall first set values of relevant registers' communication parameters, and then execute the commands by controlling status of the start/stop coil. When a single process of point-to-point movement is completed, the start/stop coil will return to stop status to get ready for the next time of work; the point-to-point-mode motion is achieved with trapezoidal waves and the motor's movement length is defined by position commands; "relative position" refers to the travel distance measured with the motor's current position as the reference point, and "absolute position" means the travel distance conversion is achieved based on the all-in-one servo unit's internal reference and the current absolute position. The values of speed, acceleration time and deceleration time define the motor's working parameters; the all-in-one servo unit will complete the required motion by automatically computing the real-time values of the execution parameters for each section;

Name	Mode	Number of Steps per Revolution	Set Speed (rpm)	Position Command	Acceleration time (ms)	Deceleration time (ms)	Type of Position Absolute/Relative	Start/Stop Coil
Address	F00	F02	F03	F05~F04	F06	F07	F0D	1
Value	3	***	***	***	***	***	***	ON

It's especially worth mentioning that when the type of position is set as "Relative", the user may make further setting of the number of motion cycles and the length of motion cycle (middle) wait time to achieve and control single-direction cyclic motion;

Name	Mode	Number of Motion Cycles	Length of Motion Cycle Wait	Unit of Time
Address	F00	F08	F09	F0C
Value	3	***	***	***

● **Pulse, Direction and Position Mode (F00=5)**

The all-in-one servo unit can receive command pulses sent through the pulse ports. As per the preset values in the register for the number of steps per revolution and the working mode register (F00=5), the pulse frequency corresponds to the motor speed, and the direction-end level controls the motor's rotation direction;

Description of CAN-OPEN Communication Protocol

ISMxxCxxx is a type of all-in-one servo unit supporting CAN-OPEN communication protocol. The user can set resolution, speed, control of motor start and stop, and realize real-time monitoring of the motor's working status through the bus.

(1) **Setting of Communication Baud Rate**

Default set value of communication baud rate is 250k bit/s, and other values (range: 20-1000, under Subindex 4, Object Index 2000) can also be set through SDO; the baud rate values supported are 20K/50K/100K/125K/500K/1000K bit/S.

Note: the user's change of communication baud rate value can take effect only after the driver is reswitched on.

(2) **Setting of Communication Station Address**

The ex-factory (default) station address is 1; the user can configure another value (1-127, under Subindex 3, Object Index 2000) to it through SDO.

Note: the user's change of communication station address can take effect only after the driver is reswitched on.

(3) **Setting of Normal Working Modes**

The driver supports 4 working modes:

- **Speed Communication Mode (set object 6060=FDh)**

Under this mode, the motor can move as per the designated speed and time length for acceleration and deceleration.

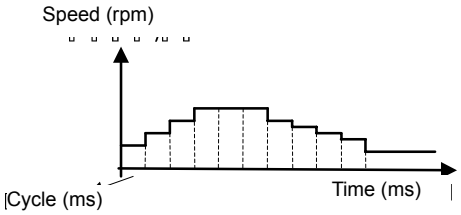

- **Cyclic Position Mode (set object 6060=8h)**

Under this mode, the upper device cyclically sends position commands to control the motor's position. The diagram on the right is the motor's speed-time curve.

- **Point-to-point Mode (set object 6060=1h)**

Under this mode, the upper device sends (relative or absolute) position commands, and the driver automatically moves to the designated position as per the parameter setting, specifically as per the given speed and acceleration/deceleration time. The figure below is the stepping motor's speed-time curve:

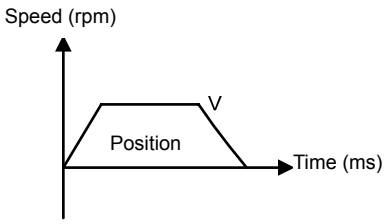

- **Pulse Direction Mode (set object 6060=F8h)**

Under this mode, the upper device sends pulse and direction signals to control the motor's rotation.

For other details, please refer to the CANopen communication manual and relevant EDS documents.

Installation Size

IMS40R005C

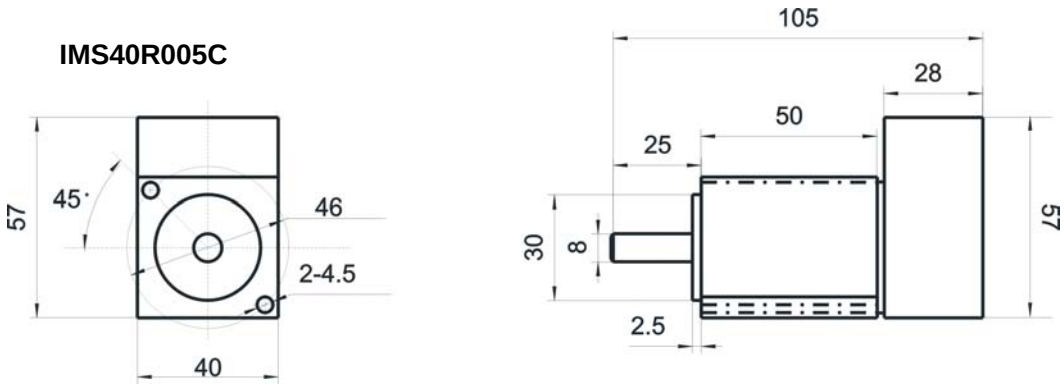

IMS60R018C

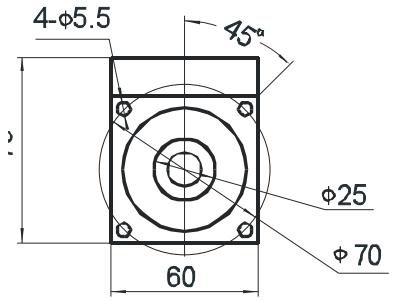

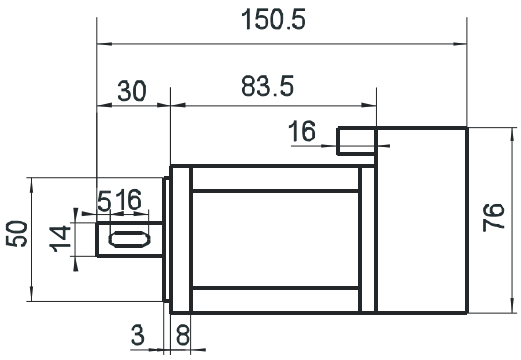

Manufacturer: Beijing HollySys Motor Technology Co., Ltd.
Add: 10th Floor, Block A, Huizhi Mansion, 9 Xueqing Road, Haidian District, Beijing
Postal Add: Postbox 2877, Beijing, 100085
Central exchange: (010) 62932100
Extensions: sales－100; technology support－810
Sales hotline: (010) 62927938
Fax: (010) 62927946
website: www. syn-tron. com

Nanjing office: (025) 84293632/37/52/53
Shenzhen branch: (0755) 26581960/61/62