This manual is prepared based on governing laws and regulations' requirements and relevant industrial standards. During your use of our products, if you have any question about any description in this manual, please consult the sales clerks who have sold you the products, or dial our customer service hotline, or send an inquiry email to our company's email address.

Beijing HollySys Electric Technology Co., Ltd. (hereinafter HollySys Electric) reserves the right to change any of the products and their specifications and parameters that are contained in this manual without prior notice.

The safety-related contents in this manual are marked with the following symbols, indicating that the marked sentences are very important, and the user must follow the instructions given by such sentences.

Symbols	Description
危险	This symbol is used to indicate that wrong use of the item described is dangerous and may cause bodily injury or death.
注意	This symbol is used to indicate that wrong use of the item described is harmful, and may cause minor or moderate harm to the operator, or damage to the equipment. But, due to difference in actual situations, wrong use of any item marked by this symbol may also cause a severe accident.
禁止	This symbol is used to indicate that the item described may never be performed.
!!重要	This symbol is used to indicate that the item marked by it doesn't fall into the category of that marked with Danger or Attention, but the user is still required to follow the instruction given by it.

■ Opening the Case and Check

Attention	
If the driver is damaged, or some of its parts are missing, never install such driver	Failure to follow the instruction will cause danger of injury

■ Installation

Attention	
Please mount it on an uninflammable metal plate, and never mount it near any inflammable material	Failure to follow the instruction will cause danger of fire
Please do tighten the driver's mounting screws	Loose screws may cause the driver to drop, or injury of people
Don't mount it in an environment with flammable gases	Failure to follow the instruction is likely to cause explosion

■ Wiring

Danger	
Please have the wire connection be performed by professional electricians and Before connecting the wires, please ensure the power supply is cut off. Never directly touch any terminal in the main circuit after the power is on.	Failure to follow the instruction will cause danger of electric shock and fire.
Work on terminals of the driver's main circuit may only be performed when the power has been off for more than 15 minutes and the capacitors' discharge has completed.	Failure to follow the instruction will cause danger of electric shock.
Please do ensure the grounding terminal is reliably grounded (grounding resistance is less than 4Ω).	Failure to follow the instruction will cause danger of electric shock and fire.
Never directly connect P/B and the zero line to the PE terminal	Failure to follow the instruction will cause short-circuiting of the rectifier bridge, which will burn out the main circuit
Never directly connect high voltage line to the control terminal of the driver.	Failure to follow the instruction will cause damage to the control panel.
Please provide the driver with an external emergency stop and lock circuit	Failure to follow the instruction will cause danger of injury (the user himself shall be responsible for connection)

Attention	
Please confirm whether the main circuit's incoming power has the same voltage as the driver's rated voltage	Failure to follow the instruction will cause danger of injury and fire
Please never perform at will breakdown and insulation tests on the driver	Failure to follow the instruction will damage the semiconductor parts and other parts inside the driver
Please connect the external braking resistor as shown by the wiring diagram	Failure to follow the instruction will cause danger of fire
Please never connect the incoming power line to the main circuit's output terminals U, V and W	Failure to follow the instruction will cause internal damage to the driver
Please use a suitable torque value to tighten the terminals of the driver's main circuit and control circuit	Failure to follow the instruction will cause danger of fire and driver's misoperation
Please never connect the phase-shift electrolytic capacitor and LC/LR noise filter to the output circuit	Failure to follow the instruction will cause internal damage to the driver

■ Trial Running

Danger	
After turning on the power, please never directly touch any terminal of the driver's main circuit	Failure to follow the instruction will cause danger of electric shock and short-circuiting
Confirm the input and output signals to ensure operation safety	Failure to follow the instruction will cause the system's misoperation, which will cause bodily injury or death, damage the work piece and peripheral equipment
The alarm may be removed only after the enabling signal is confirmed to have been cut off, or a sudden restart will occur	Failure to follow the instruction will cause danger of injury
If a driver has been stored for a long time, confirm there's no water and condensation of moisture inside it	Failure to follow the instruction will cause danger of burn-out of the driver
During the operation, never let your hand touch the driver's connecting terminals	Failure to follow the instruction will cause danger of electric shock, which may cause bodily injury or death

Attention	
After running starts, the driver and motor may have a big temperature rise, please don’t touch them at will	Failure to follow the instruction will cause danger of scald
The external braking resistor will have a big temperature rise due to discharge, please don’t touch it	Failure to follow the instruction will cause danger of scalding and electric shock
Please never change the driver’s setting at will	Failure to follow the instruction will cause equipment damage and accidents, and generate danger
Please pay attention to the operation like changing to internal parameters during running	Failure to follow the instruction will cause wrong operation, which will cause equipment damage and accidents, and consequent danger

Chapter I Introduction to and Installation of the Products

1.1 Brief Introduction to the Products

DS- series servo drivers are a series of high-performance and highly reliable full-digital AC servo motor drivers developed by Beijing HollySys Electric Technology Co., Ltd. With American TI Company's fully new-type digital signal processor (DSP) as the core controlling component which has high speed data treatment ability. The advanced full-digital motor control algorithm enables the drivers to accurately control position, speed and output torque of the permanent-magnet synchronous servo motors and hub motors, making them applicable to service robot, inspection robot, AGV, etc. For the best performance, please refer to this manual when installing and debugging this product.

Figure 1-1 below shows structure of the driver:

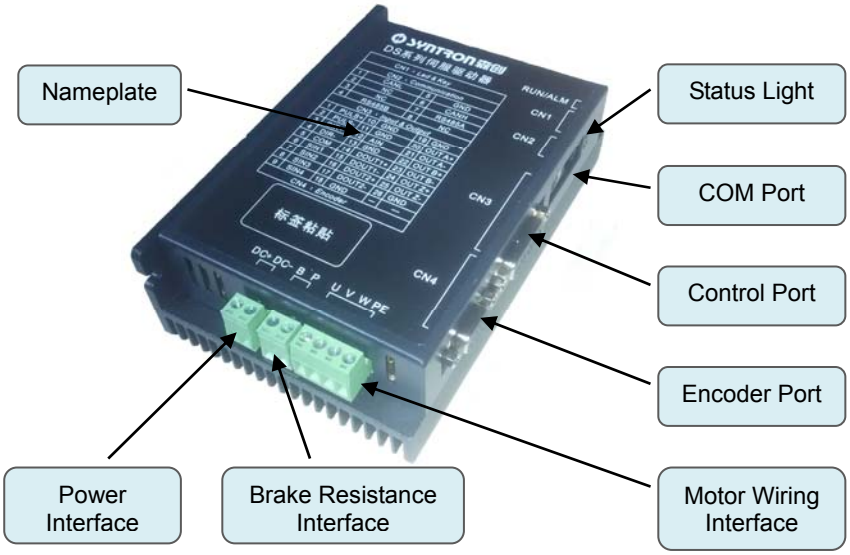

Figure 1-1 Brieft Introduction of Driver

1.2 Product Nameplate

Driver’s lateral side is pin assignment of each port, see Figure 1-2 for its contents:

Figure 1-2 DS10240A Nameplate

1.3 Model Naming Rule

DS 1 02 40 A

Version No.	A：standard
Output Power	40：40A 30：30A 10：10A
Power Supply	02：DC 24V 03：DC 36V 05：DC 48V 06：DC 60V 08：DC 80V
Type Specification	1：single axis 2：two-in-one 4：four-in-one
Series Code	DS universal series

1.4 Performance Parameters

Driver model		DS10240A
Supply voltage		DC 24V
Control features	Control mode	SVPWM modulation, closed-loop vector control
	Speed control accuracy	±0.01rpm
	Electronic gear	(1～9999)/(1～9999)
	Position control accuracy	±1pulse
	Braking method	A totally new type of regenerative energy-consuming braking
	Overload capacity	200%，30s
I/O interface	Digital input	4-channel optocoupler isolation input
	Digital output	2-channel optocoupler isolation output, OC output connection
	Analog input	1-channel -10V ～ +10V, operational amplifier input buffer interface, without electrical isolation
	Encoder input	Support incremental QEP
	Encoder requency-dividing output	For the standard motor encoder's signal (default type: 2500-wire), the ports can perform integer (1~255) frequency-dividing output.
	Pulse input	6 input modes are available: single-pulse mixed logic, double-pulse mixed logic, and orthogonal-pulse mixed logic
	Communication bus	Modbus
environment	Place for use	A place without dust, erosive gases and flammable gases
	Temperature	0℃ ～ +40℃
	Humidity	Under 95% RH (with no condensation of moisture)
	Vibration	Vibration frequency ≤ 20Hz: 9.8m/s²; 20Hz ≤ vibration frequency ≤ 50Hz: 2 m/ s²

1.5 Product Composition

Item	Composition
Parts and subassemblies	* servo driver * servo motor * Input and output socket connectors * External regenerative energy discharge resistor
Optional parts	* Connecting cables (customized as per the customer's demand)

1.6 Inner Block diagram of the Driver

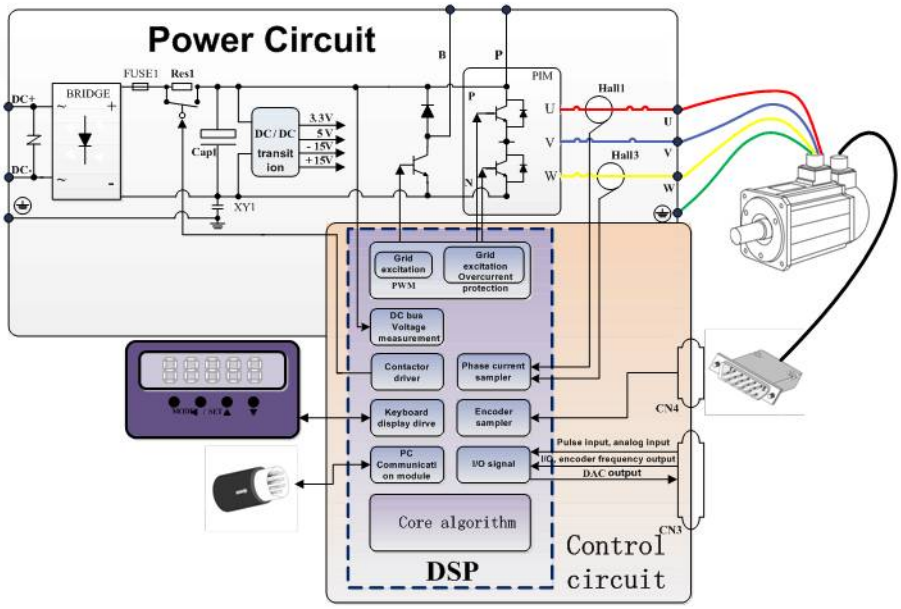

Figure 1-3 Inner block diagram of the DS10240A servo driver

1.7 Opening the Case and Checking

When receiving a product, please confirm the items shown in Table 1-4, if any discrepancy is found, please directly contact the manufacturer.

Items for confirmation	Method of confirmation
Have all the items in the packing list arrived?	Packing list is pasted on the outer package, check whether items packaged are the same as described in the list
Are the items the ones ordered?	Please confirm the label on one side of the driver
Is any part damaged or worn?	Check the product's outer appearance to confirm whether it has been damaged during transport

1.8 Shape and Installation

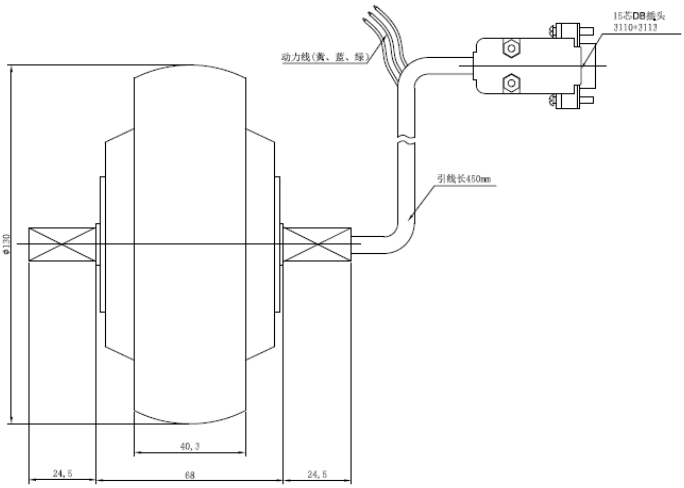

Figure 1-4 8030 double output shaft servo electric wheel

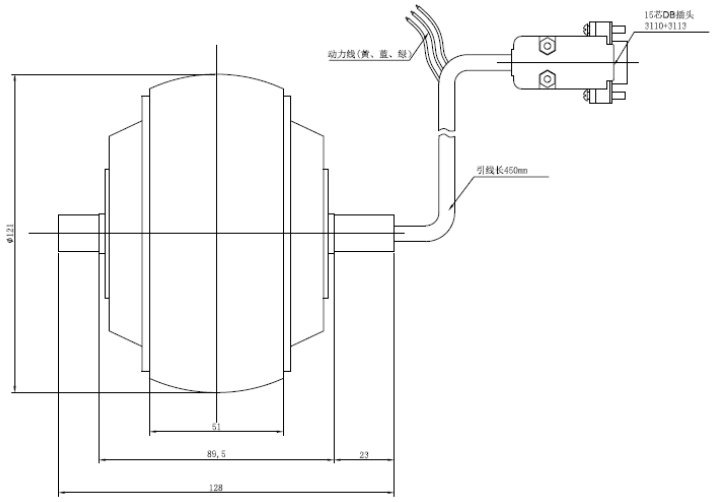

Figure 1-5 8045 double output shaft servo electric wheel

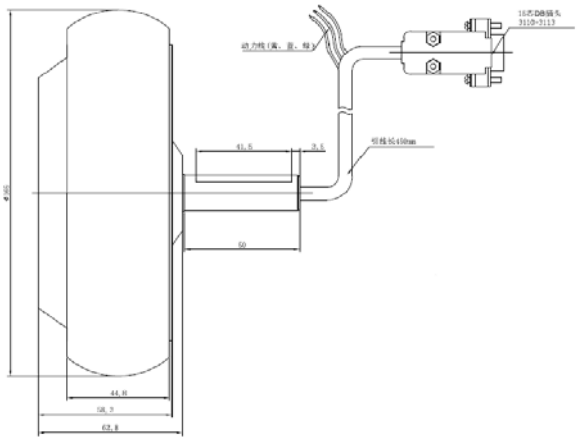

Figure 1-6 10530 single-output shaft servo electric wheel

1.9 External Dimensions and Mounting Dimensions

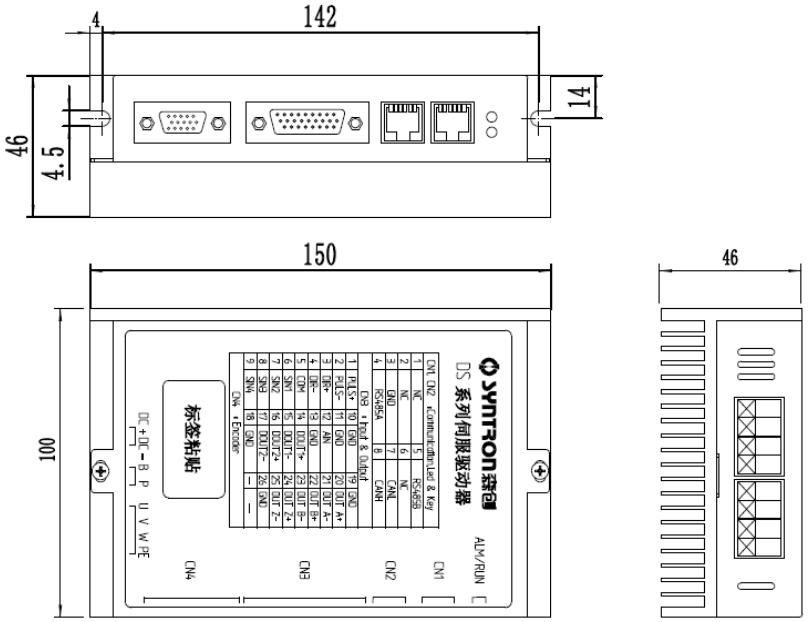

Figure 1-7 DS10240A

1.10 Confirmation and Requirements of the Places for Mounting and Storage

When selecting the environment for mounting and storage, pay attention to the following requirements:

1) Environment temperature: in case of running in the temperature range of 0℃ ~+40℃, if the environment's ambient temperature is over 40℃, for every 5℃ of temperature rise, a 30% derating of the driver is needed for operation, and ventilation must be enhanced to improve heat dissipation;
2) Humidity of the mounting and storage place shall be lower than 95% without condensation of moisture;
3) Don't mount or store the driver in an environment full of dust, smog or metal powder;
4) The mounting and storing environment must be without erosive gases and explosive gases;
5) Vibration of the mounting and storage environment must meet such requirement: vibration frequency ≤ 20Hz: 9.8m/s², 20Hz ≤vibration frequency ≤ 50Hz: 2 m/s²;
6) The mounting and storage environment must not be straight shone by the sun
7) Mounting in control cabinet generally equipped with air intake, air outlet and appropriative cooling fun.

ChapterII Wiring

2.1 Connection of Main Circuit's Terminals

2.1.1 Types of Main Circuit's Terminals

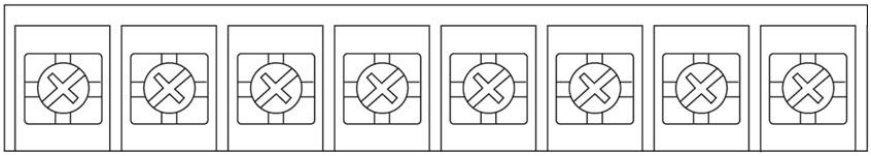

Figure 2-1 Types of main circuit's terminals of DS series driver

2.1.2 Description of Main Circuit's Terminals and Their Functions

<table>
<tr><th>Name</th><th>Function</th><th>Precaution</th></tr>
<tr><td>DC+、DC-</td><td>Power supply input terminal</td><td>An isolated power supply of DC 24V is recommended</td></tr>
<tr><td>P、B</td><td>External braking resistor</td><td>Capacity of the external braking resistors should match the driver's capacity and working condition</td></tr>
<tr><td>U、 V 、W
PE</td><td>Motor connector</td><td>
<table>
<tr><th>Terminal marking</th><th>Definition</th></tr>
<tr><td>U</td><td rowspan="3">Three phases</td></tr>
<tr><td>V</td></tr>
<tr><td>W</td></tr>
<tr><td>PE</td><td>GND</td></tr>
</table>
</td></tr>
</table>

2.1.3 Connection on the Main Circuit's Input Side

The driver's input side is connected to an isolated DC power supply, power of which is to be determined by the load. If a switching power supply's power is not enough, it is recommended to use an isolated transformer equipped with a rectifier module.

2.1.4 Connection on the Main Circuit's Output Side

The driver's output terminals U, V, W and PE shall be connected as per the correct phase sequence to the servo motor's connecting terminals U, V, W and PE.

servo motor's U/V/W/PE windings are correspondingly colored red/blue/yellow/green (yellow green).

2.1.5 Connection of the Grounding Wire

Grounding resistance: under 4Ω. Please select the wire diameter as prescribed by the governing technical standards for electrical equipment, and the wire's length should be as short as possible. When two or more drivers are used, never let the grounding wires form a circuit, as shown below:

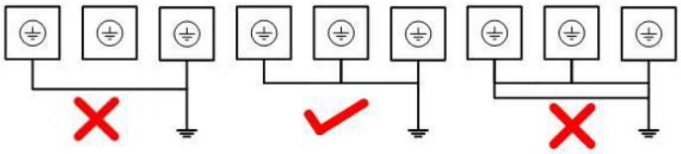

Figure 2-2 Connection of Grounding Wires

2.1.6 Connection of Braking Resistors

Any braking resistor shall be connected between terminal P and terminal B, please never connect it to any other terminal, or the braking resistor will be burnt out by abnormal heat, or the driver will probably be damaged. Figure 2-3 shows how to connect the external braking resistor(s).

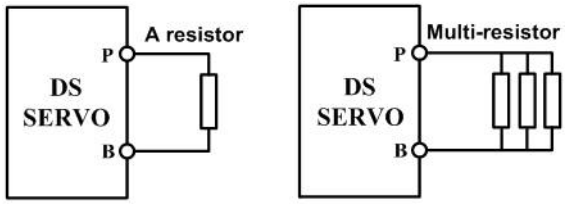

2.2 The Definition of communication terminal CN1/CN2

2.2.1 Communication terminal CN1/CN2's pins as in Figure2-4.

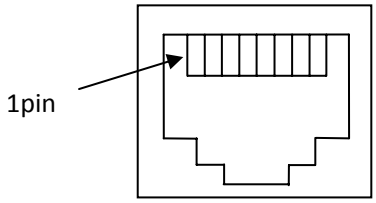

Figure 2-4 CN1 / CN2's pins

2.2.2 The pins definition of communication terminal CN1/CN2 as follows:

Number	1	2	3	4
Signal definition	NC	NC	GND	RS485_A
Number	5	6	7	8
Signal definition	RS485_B	NC	CAN_L	CAN_H

Table 2-2 the pin definition of communication terminal CN2

2.3 Definition of Input and Output Interface CN3's Pins

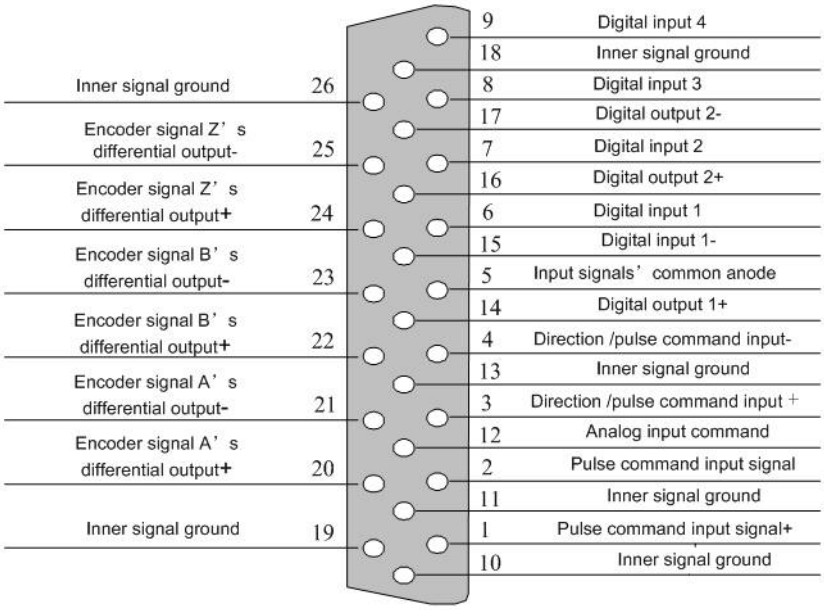

DS driver supports 4-channel input and 2-channel output. The function and logic of IO interface can be defined as needed.

2.3.1 Names and Functions of Input Signals

Pin No.	Configuration Parameter			Filtering Parameter		
	Parameter	Factory setting	Function Description	Parameter No.	Factory setting	Unit
6	Fn__70	001	XXX 0 01 Port function definition Logic definition Logic definition 0: effective Optocoupler conduction 1: effective optocoupler stop Port function definition 00: undefinition 01: servo enabling input 02: alarm clear signal input 03: control mode selection 04: inner speed selection input 1 05:inner speed selection input2 06:inner speed selection input3 07: forward prohibition input 08: inversion prohibition input 09: zero given 10:pulse command input prohibition 11: position deviation counter reset 12: torque direction selection input 1 13:torque direction selection input2 14: speed limit selection input1 15:speed limit selection input2 16: electronic gear ratio selection input 1 17: electronic gear ratio selection input 2 Note: the factory setting value of this tablet is the default value under external speed mode and internal speed mode.	Fn__78	50	125 us
7	Fn__71	002		Fn__79	50	125 us
8	Fn__72	003		Fn__7A	50	125 us
9	Fn__73	004		Fn__7B	50	125 us

2.3.2 Names and Definitions of Output Signals

Channel No.	Pin No.	Configuration Parameter		
		parameter	Factory setting	Function Description
1	14	Fn__6C	001	XXX 0 01 port function definition Logic definition Logic definition 0:optocoupler conduction effctive 1:optocoupler stop effective Port function definition 00: undefined 01: servo ready 02:speed arrive 03:position arrive 04:braking releasing 05: zero speed arrive 06: alarm output 07:speed limiting 08:torque limiting
	15			
2	16	Fn__6D	003	
	17			

2.3.3 Wiring of the Analog Command Input Interface

When a LS series servo driver works under external analog speed mode or external analog torque mode, it's necessary to use an analog command input interface to receive the analog commands sent from the upper computer ('s rheostat or DAC). The allowable level range of the analog input interface is -10V~+10V. Structure and wiring of analog command input interface are as shown in Figure 2-6

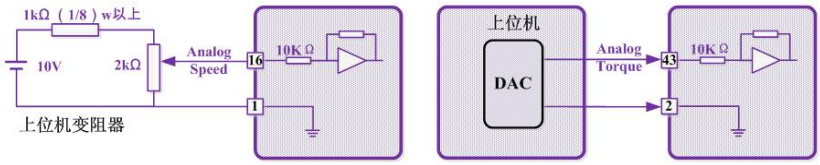

2.4 Definition of Encoder Interface CN4

Pins of encoder interface CN4 as follows:

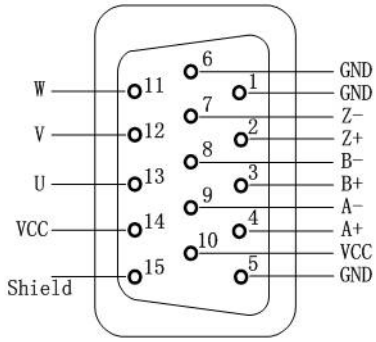

2.5 Precautions for Wiring and Use of Motors Equipped with Brakes

（1） Controlling voltage of the braking control coil of a servo motor's

electromagnetic brake is 24VDC, and its current is got by 24V/R, which should be 500mA ~ 2A. R is resistance value of the electromagnetic brake's control coil, and can be measured with a multimeter.

（2） A servo motor with a built-in electromagnetic brake is allowed to run only after the electromagnetic brake is turned on; never forcibly run the motor before turning on the electromagnetic brake.

（3） the sequence diagram of brake motor running and stopping

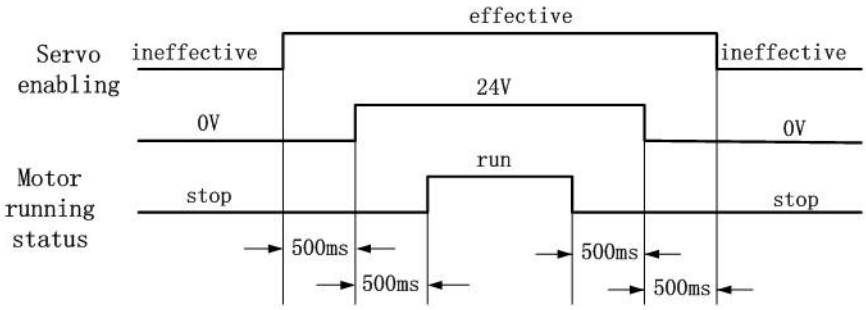

Attention
Optocoupler isolation is used for user's output signals; the optocoupler allows only a limited amount of current to pass, and cannot be used to directly control energization and deenergization of the electromagnetic brake's control coil, which must be achieved through an external relay and a DC power supplier.

2.6 External Driver Wiring

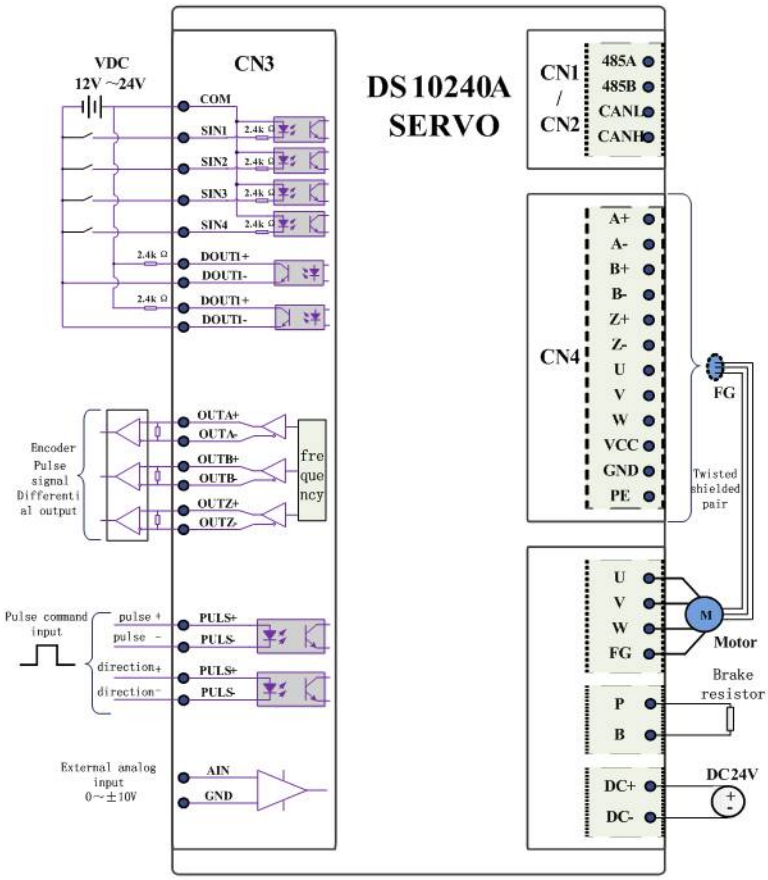

NO1:

Pulse command input(NPN open collector) use 5V power supply

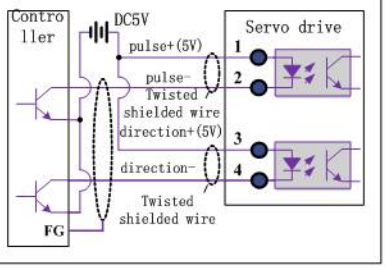

NO2:

Pulse command input(NPN open collector) use 5V power supply

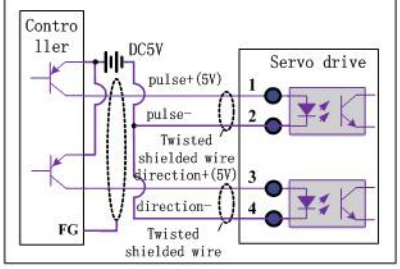

NO3:

Pulse command input(PNP open collector) use 12~24V power supply

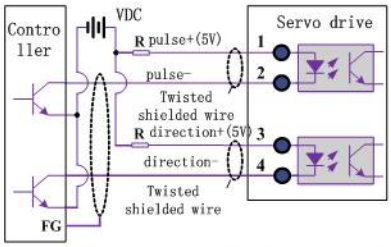

$$R=\frac{VDC-1.5Volt}{10mA}-220(\Omega)$$

VDC	R
12V	1KΩ/0.25W
24V	2KΩ/0.25W

NO4:

Pulse command input(PNP open collector) use 12~24V power supply

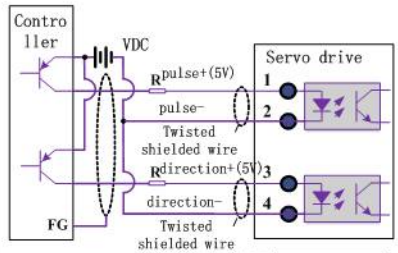

$$R=\frac{VDC-1.5Volt}{10mA}-220(\Omega)$$

VDC	R
12V	1KΩ/0.25W
24V	2KΩ/0.25W

NO5:

Pulse command input (differential signal)

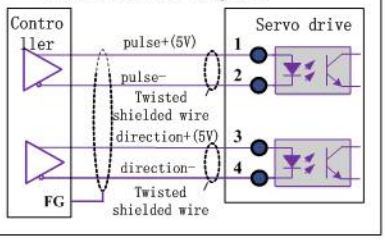

Chapter III Use of the Operation Panel

3.1 Display on the panel

the operation panel is mainly composed of 6 sets of numerating tubes and 4 push keys. The numerating tubes are used to show the servo driver's current working status, function code and parameter values; the push keys are used to select and edit parameters and to perform trial running.

3.2 Description of the Panel

3.2.1 Look-up Table of Displayed Numbers and Letters

number	1	2	3	4	5	6	7	8	9	0	Decimal point	
letter	A	B	C	D	E	F	G	H	J	L	N	O
	P	Q	R	S	T	U	V	Y	Null	-		

3.2.2 Description of Display of Numerating Tubes

The numerating tubes' display interface is divided into three layers: current working status interface, function code selecting Interface (including for "Fn " configuration parameters and "Dn " status parameters) and parameter observing (for "Dn " status parameter values) and editing (for "Fn " configuration parameters) interface; By touching the push keys, the user can shift between the three layers, Figure 3-2 shows the concrete operation steps for shifting.

3.2.3 Power-on Initial State

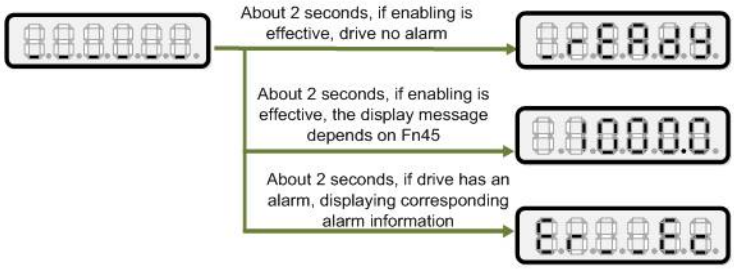

3.2.4 Definition of Push Keys' Functions

The push keys are provided for the user's selection, observation and edition of parameters, and for trial running as well; detailed definition of the keys are as shown in Table 3-2 below.

Push key	Definition	Operation Description
MODE	Mode shifting	It is used for shifting between the "Interface of Current Working Status", "Interface for Selecting the Status Parameter" and "Interface for Selecting the Configuration Parameter" It is used for returning from "Interface for Observing and Editing the Parameter" to the "Interface for Selecting the Function Code" when the user is observing or editing the driver's internal parameters
◄/SET	Confirm & move between digits	✧ In the "Interface for Selecting the Function Code" and "Interface for Editing the Configuration Parameter", by giving a normal short push on the key, the user can select the function code and the digit position of the parameter value he wants to change, the digit position he has selected for change will flash ✧ In the "Interface for Selecting the Function Code", if the user has selected a parameter's No., and held down the key for 1 second, he will enter the "Interface for Observing and Editing the Parameter" ✧ In the "Interface for Editing the Configuration Parameter", by holding down the key for 1 second, the user can confirm and save the changed parameter value ✧ Under JOG mode, in the "servo enabling ineffective" status, long press to access "servo enabling", short press to access "servo enabling ineffective".
▲	Progressive increase key	n the "Interface for Selecting the Function Code" and "Interface for Editing the Configuration Parameter", the digit that is selected by the user for change will flash, and show increase of its value by increments of "1" Under JOG mode (Fn__00 =3), after servo enabling is effective, by holding down this key, the user can make the motor rotate in the forward direction (namely counterclockwise direction CCW)

	Progressive decrease key	In the “Interface for Selecting the Function Code” and “Interface for Editing the Configuration Parameter”, the digit that is selected by the user for change will flash, and show decrease of its value by increments of “-1” Under JOG mode (Fn__00=3), after servo enabling is effective, by holding down this key, the user can make the motor rotate in the backward direction (namely clockwise direction CW)
	Key Combination	Decimal point shifts, be effective when edit parameter Fn__33，Fn__35，Fn__37，Fn__39，Fn__4c，Fn__4d，Fn__4E and Fn __4F.

3.2.5 Basic Procedure of Panel Operations

Figure 3-3 shows the basic procedure of panel operations.(note: short press, hold down the key for one second; long press, hold down the key above three seconds.

3.3 Example of Query Dn Parameter

Status parameters of DS-series servo drivers are marked by “Dn xx”; during debugging, the operator can observe status parameters of motor and driver.

Figure 3-4 below shows an ordinary example of Dn status parameter inquiry.

3.4 Example of Query Edition Fn Parameter

Configuration parameters of DS-series servo drivers are marked by “Fn xx”; when the user has bought the product, he needs to set the relevant configuration parameters based on the difference between applications. Figure 3-9 below shows an ordinary example of inquiry about and edition of a configuration parameter.

Chapter IV Trial Running

4.1 Basic Procedure of Trial Running

When a driver is energized for the first time, the following procedure must be followed.

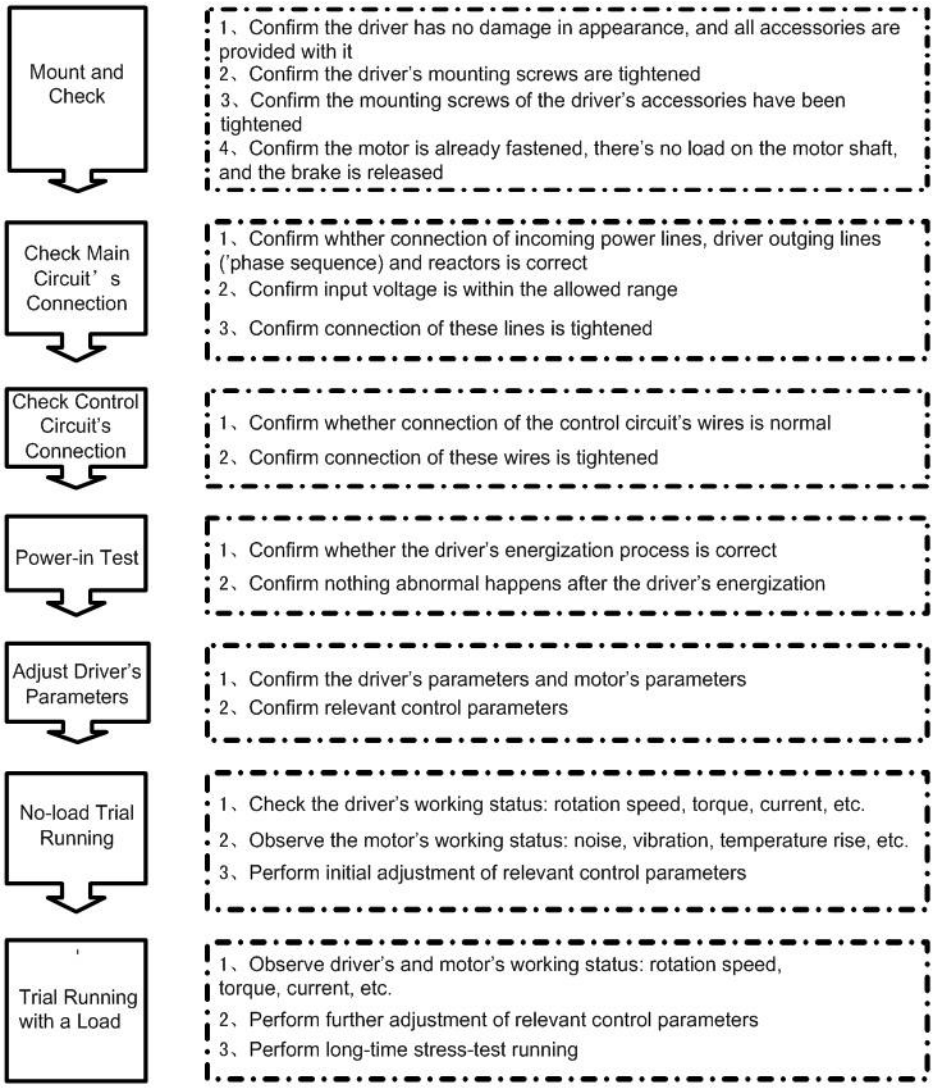

4.2 Confirm Connection of Wires of Main Circuit

1) Driver's DC+ and DC- terminals are connected to the 24VDC power supply.

2) When connecting the driver's output terminals to the motor, their phase sequence must be identical, or the motor cannot work normally, and there will be possibility of burning out the driver and motor. Two ends of the grounding wire shall be respectively connected to the motor's enclosure and driver's enclosure, and then connected to the electrical cabinet's grounding wire.

3) Driver and motor must be reliably grounded;

4) Different power level driver has different current peak, please select appropriate diameter cable.

5) Confirm all connections are tightened.

4.3 Confirm Connection of Wires of Control Circuit

1) Confirm encoder cable CN4 is wired correctly and encoder cable is recommended to be a shielded twisted-pair cable;

2) Communication cable is recommended to be a shielded twisted-pair cable;

3) Confirm control terminal CN3 is wired correctly and CN3 must be our company matching suppliers.

4) Confirm all the wire connections and plugs are tightened and firm.

4.4 Confirm Motor and Configuration Parameters

DS-series servo driver already has appropriate motor parameter setting as per the motor to work with it before it goes out of the factory, and most of the set parameters need not be changed. When change to any parameter is needed, please refer to "Chapter VI Parameters and Functions"; for more details, please consult the manufacturer.

4.5 No-load Trial Running under JOG Mode

To avoid accidents, please remove the load from motor first (including the coupling of motor shaft and related accessories). According to the normal operational program procedures, if the motor can run normally, you can connect the motor load.

Through running under the JOG mode, the user can check whether connections of motor windings and encoder's feedback cable are correct, and confirm whether the motor is working normally. Please refer to the following steps of operation.

1) Turn on the control power（DC+，DC-）

2) Set drive to work in JOG mode, that is Fn_00=3. When the setting is complete, disconnect the power.

3) Reconnect power supply

4) Long press the key ◀/SET, servo enabling.

5) Hold down ▲, the motor rotates in forward direction, the speed is equal to the value of Fn_3B, up to 500rpm.

6) Hold down ▼, the motor rotates in reverse direction, the speed is equal to the value of Fn_3B, up to 500rpm.

7) Running complete, short press ◀/SET, turn off enabling, set Fn_00 to user's desired control mode.

4.6 External Analog Speed Mode No-load Test Running

External analog speed mode operation steps:

1) Turn on the control power（DC+，DC-）;

2) Set the drive to work in the external analog speed mode, that is Fn_00=0, disconnect control power after setting.

3) Reconnect control power

4) Set the Fn_0C, the Fn_0d, the Fn_0E, confirm the gain of analog speed command, offset and direction.

5) Enabling servo (through external IO or set Fn_38 = 1). In the case of no alarm, input adjustable DC voltage between CN2-16 and CN2-17. The motor runs in accordance with current input voltage corresponding to speed and direction. Adjusting the voltage size and polarity can change the speed and direction of motor. Make sure that the motor is running in accordance with the input command.

6) If the input voltage is 0V, the motor is running at low speed, you can adjust the parameter Fn_0d to overcome the zero speed drift.

7) Test running completes, close enabling, set Fn_00 to the control mode for users.

4.7 Internal Digital Speed Mode No-load Running

By internal speed mode running, check motor windings and encoder feedback cable wiring. Check whether the channel wiring of internal speed is correct ,at the same time to confirm whether the motor is running smoothly.

Internal digital speed mode operating steps:

1) Turn on control power（DC+，DC-）;

2) Set the drive running in the internal speed mode, that is Fn_00=1, then disconnect control power.

3) Reconnect control power.

4) Confirm the parameter Fn_30、Fn_31、Fn_33、Fn_35、Fn_37、Fn_39、Fn_4C、Fn_4D、Fn_4E and Fn_4F. enabling servo (through external IO or Fn_38 =1). Motor

runs in accordance with the input status of “inner speed selection 1”,”inner speed selection 2” and “inner speed selection 3”, and corresponding to the setting speed of the parameter Fn_33、Fn_35、Fn_37、Fn_39、Fn_4C、Fn_4D、Fn_4E and Fn_4F, at the same time modify the internal speed parameters online which is the Fn_33、the Fn_35、the Fn_37、the Fn_39、the Fn_4C、the Fn_4D、Fn_4E and Fn_4F. Adjust the speed and direction in real time.

5) Running complete, turn down enabling, set the Fn_00 to the control mode for users.

4.8 Position Mode No-load Test Running

Position mode operation steps:

1) Connect control power（DC+，DC-）

2) Set the drive in the position mode, that is Fn_00=2. Disconnect control power after seting.

3) Reconnect control power

4) Modify the Fn_0f、Fn_10 and the Fn_2e and confirm the electronic gear ratio and pulse instruction.

5) Input position pulse command at the CN2-27、CN2-12 and CN2-28、CN2-13 or the CN2-27、CN2-14 and CN2-28、CN2-15. At this point the motor should be running in accordance with the definition of electronic gear ratio and input pulse command corresponding to speed and direction. The nixie tube displays current speed. Make sure that the motor is running in accordance with the input command.

6) Adjust input pulse frequency. Motor speed corresponding to pulse frequency. Make sure the running motor is in accordance with the input command.

7) If the given signal of pulse inhibit is effective, the motor will be in the zero lock shaft status.

8) Test running is complete, close enabling, set Fn_00 to control mode for users.

4.9 External Analog Torque Mode No-load Test Running

External analog torque mode operation steps:

1) Connect control power（DC+，DC-）;

2) Set running drive in position mode, that is Fn_00=4, after setting disconnect control power;

3) Reconnect control power;

4) Modify Fn_26、Fn_27、Fn_28 and Fn_29 and determine the given gain of analog torque, offset and direction definition.

5) After confirming that the parameter is set correctly, the servo is enabled. In the absence of an alarm, an adjustable DC voltage is input between CN2-43 and CN2-2. This voltage is gradually increased from 0V. the motor output the corresponding torque and the negative voltage motor output the reverse torque.

6) If the command voltage is 0V, the motor also has torque output, adjust the

parameter Fn_27 to zero torque.

7) After test running completes, close enabling, set the Fn_00 to control mode for users.

Chapter V Control Mode

5.1 Control Mode Selection

DS series dirve support three basic control mode which is position, speed and torque and you can use a single control mode, you can also use the mixed control mode. You can select control mode by the Fn__00. The specific control mode is shown in Table 5-1 below.

<table>
<tr><th>Parameter No.</th><th>Ex-works Setting</th><th colspan="3">Description of Function</th></tr>
<tr><td rowspan="11">Fn__00</td><td rowspan="11">2</td><td colspan="3">0：External speed running mode. According to the external analog of CN2-16 and 17 and -10V～+10V given signal to determine the speed and direction of running motor.</td></tr>
<tr><td colspan="3">1：Inner speed running mode. According to the parameter setting of Fn__33, Fn__35, Fn__37, Fn__39, Fn__4C, Fn__4D, Fn__4E, Fn__4F and the port status of “internal speed input selection 1” and “internal speed input selection 2” and “internal speed input selection 3” to determine the speed and direction of running motor.</td></tr>
<tr><td colspan="3">2：Position pulse running mode. Receive external position command pulse and direction level signal input.</td></tr>
<tr><td colspan="3">3：JOG running mode. Determining running motor speed by setting the parameter Fn__3b, and press the key ▼ and ▲ to control the direction of running motor.</td></tr>
<tr><td colspan="3">4: Torque control running mode. The CN2-43 and 1 input external analog given signal (－10V～+10V) determine the torque and direction of motor running.</td></tr>
<tr><td colspan="3">5～10: mixed control running mode. According to the input port status of CN2-24 selection:</td></tr>
<tr><td rowspan="2">Fn__00</td><td colspan="2">CN2-24 interface status</td></tr>
<tr><td>disconnect（first mode）</td><td>close（second mode）</td></tr>
<tr><td>5</td><td>Position pulse mode</td><td>external speed running mode</td></tr>
<tr><td>6</td><td>Position pulse mode</td><td>Internal speed running mode</td></tr>
<tr><td>7</td><td>Position pulse mode</td><td>Torque control running mode</td></tr>
<tr><td>8</td><td>Internal speed running mode</td><td>external speed running mode</td></tr>
<tr><td>9</td><td>Internal speed running mode</td><td>Torque control running mode</td></tr>
<tr><td>10</td><td>external speed running mode</td><td>Torque control running mode</td></tr>
</table>

5.2 Running in the Position Mode

5.2.1 Control Module Diagram of External Pulse Position Mode

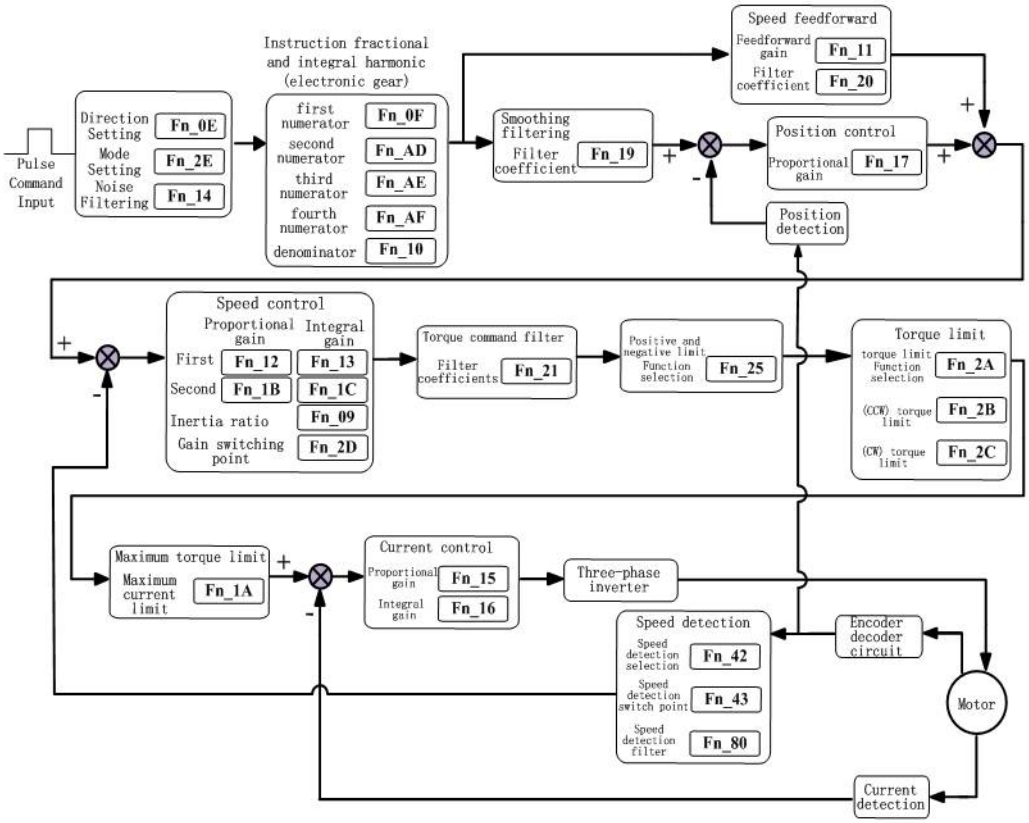

5.2.2 Command Pulse Inhibition Function

If the pulse inhibition given signal is set ON, the position command input value can be ignored, so that the servo motor shaft is in the state of locked shaft.

5.2.3 Pulse Command Window Filter

In some environments with severe noises, pulse signals can be filtered by configuring the parameter "Fn_14", so as to achieve the noise suppression effect.

parameter		Description					Parameter range		Default value
Fn__14		The larger the value,the better the filtering, but will affect the pulse frequency.					1～100		4
Fn__14 set point	Frequency KHz	Fn__14 set point	Frequency KHz	Fn__14 set point	Frequency KHz	Fn__14 set point	Frequency KHz	Fn__14 set point	Frequency KHz
1	1300	15	140	29	86	43	58	57	43
2	900	16	135	30	83	44	56	58	42
3	600	17	130	31	81	45	56	59	41
4	500	18	120	32	79	46	55	60	40
5	400	19	110	33	77	47	54	61	39
6	350	20	105	34	74	48	53	62	38
7	300	21	100	35	72	49	52	63	37
8	260	22	95	36	71	50	51	64	36
9	240	23	95	37	68	51	49	65	35
10	220	24	92	38	66	52	48	66	34
11	200	25	92	39	65	53	47	67	33
12	180	26	91	40	64	54	46	68	32
13	160	27	90	41	62	55	45	69	31
14	150	28	89	42	60	56	44	70	30

5.2.4 Pulse Command Smoothing Filter

DS series of drivers provide smoothing filters for pulse given signals to make the servo motor rotate more smoothly. This function applies to the occasions that no acceleration and deceleration are required for an upper computer sending commands; and the settings have no effect on the amount of movement (number of command pulses).

Configuration parameters	Description	Parameter range	Default value

Fn__19	Smoothing filter constant	1 ～ 1024	1024
Fn__A5	Pulse command filter type selection	0 ～ 2	0

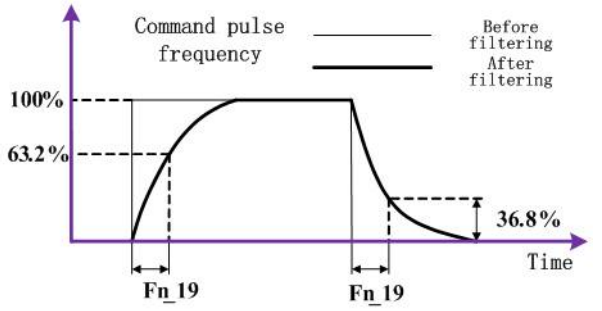

5.2.5 Selection of Pulse Command Mode

Select 6 varieties of different pulse command modes as follows by setting the parameter "Fn_2E":

Fn__2E	Input Mode	Description	Waveform Illustration (Arrow indicates a valid position command)
1	Single pulse Positive logic	Optocouplers at the pulse ends (12,27) or (14,27) from switch-off to switch-on is interpreted as a command received, and optocouplers at the direction ends (13,28) or (15,28) from switch-off to switch-on is interpreted as the level control operation direction	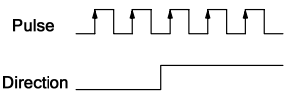
2	Single pulse Negative logic	Optocouplers at the pulse ends (12,27) or (14,27) from switch-off to switch-on is interpreted as a command received, and optocouplers at the direction ends (13,28) or (15,28) from switch-off to switch-on is interpreted as the level control operation direction	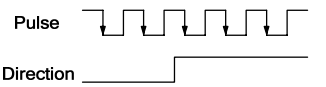
3	Double pulse Positive logic	Optocouplers at the pulse ends (12,27) or (14,27) from switch-off to switch-on is interpreted as a forward rotation command received, and optocouplers at the direction ends (13,28) or (15,28) from switch-off to switch-on is interpreted as a reverse rotation command received	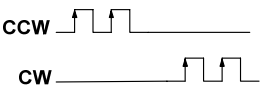
4	Double pulse Negative logic	Optocouplers at the pulse ends (12,27) or (14,27) from switch-off to switch-on is interpreted as a forward rotation command received, and optocouplers at the direction ends (13,28) or (15,28) from switch-off to switch-on is interpreted as a reverse rotation command received	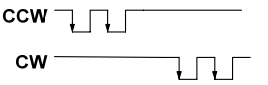

5	Quadrature pulse Positive logic	The pulse ends (12,27) or (14,27) are taken as the quadrature signal A phase, the direction ends (13, 28) or (15, 28) are taken as quadrature signal B phase, and if A leads B, it is interpreted as the positive direction	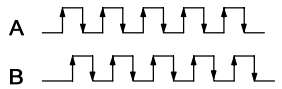
6	Quadrature pulse Negative logic	The pulse ends (12,27) or (14,27) are taken as the quadrature signal A phase, the direction ends (13, 28) or (15, 28) are taken as quadrature signal B phase, and if B leads A, it is interpreted as the positive direction	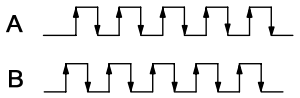

5.2.6 Electronic Gear Setting

（1） Significance of the Electronic Gear Function

"Electronic gear function" refers to the function that the amount of movement of a workpiece can be set to any value corresponding to 1 pulse command input by the command controller. The 1 pulse command from the command controller is the smallest unit, called "1 command unit".

（2） Electronic Gear Ratio Setting

The mechanical gear ratio of the motor shaft to the load side is n/m (the load shaft rotates for n laps when the motor rotates for m laps), and the setting value of the electronic gear ratio can be obtained through the following formula:

$$\text{Electronic gear ratio } \frac{A}{B} = \frac{\text{Numerator}}{\text{Denominator}} = \frac{\text{Encoder resolution}}{\text{The amount of movement of the load shaft per revolution (instruction unit)}} * \frac{m}{n}$$

Configuration parameters	Description	Parameter range	Default value
Fn__10	Denominator	1～9999	1
Fn__0F	Numerator 1	1～9999	1
Fn__AD	Numerator 2	1～9999	1
Fn__AD	Numerator 3	1～9999	1
Fn__AF	Numerator 4	1～9999	1

（3） Electronic Gear Ratio Setting Procedures

Electronic gear ratio settings vary depending on mechanical structures. Please set as per the steps shown in the following table:

Step	Setting Contents
1	**Confirm the gear ratio of the machine, ball screw lead, pulley diameter, and the encoder resolution of the servo motor used.**
2	**Confirm the command unit of the upper computer, and determine the command unit on the basis that the specifications, positioning accuracy and**

	the like of the machine are considered.
3	**Calculate the required command unit quantity of the load shaft per revolution by taking the determined command unit as the basis.**
4	**Calculate the electronic gear ratio according to the computational formula of electronic gear ratio.**
5	**Set the electronic gear ratio calculated in the corresponding parameter.**
6	**The electronic gear ratio is dynamically switched according to actual needs in case the motor stops (4-level switching).**

（4） Computational Formula of Electronic Gear Ratio

The computational formula of electronic gear ratio is shown in Figure below:

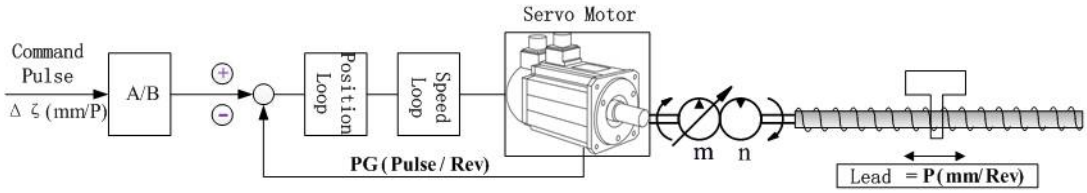

Δζ (mm/P) : Command Unit

PG (Pulse/Rev): Encoder resolution (4 multiple frequency of QEP encoder line number)

P (mm/Rev) : Ball screw lead

n/m : Reduction ratio (the load shaft rotates for n laps when the motor rotates for m laps)

(n*p)/ Δζ*(A/B)=PG*m

(A/B)=(PG*m*Δζ)/(n*P)=PG/(P/Δζ)*(m/n)

Set the electronic gear ratio numerator A and electronic gear ratio denominator B through parameters.

（5） Examples of Electronic Gear Ratio Setting

Step	**Content**	**Mechanical Constitute**		
		Ballscrew	**Circular Truncated Cone**	**Belt + Belt Pulley**
		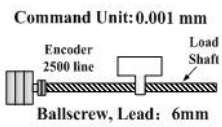	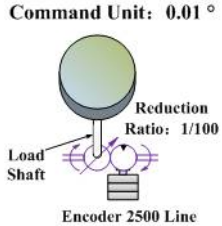	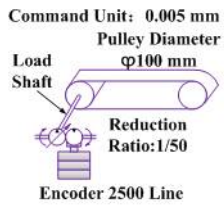
1	Machine ry Specifica	Ballscrew Lead：6mm Reduction Ratio：1:1	The angle of per revolution：360°	Pulley Diameter：100mm Reduction Ratio：1:50

	tion			Reduction Ratio: 1:100			
2	Encoder Resolution	2500*4=10000		2500*4=10000		2500*4=10000	
3	Instruction Unit	0.001 mm (1 μm)		0.01°		0.005 mm (5 μm)	
4	The amount of movement of the load shaft per revolution	6 mm/0.001 mm = 6000		360°/0.01°= 36000		πx100 mm/0.005 mm = 62800	
5	Electronic gear ratio	$\frac{A}{B}=\frac{10000}{6000}\bullet\frac{1}{1}$		$\frac{A}{B}=\frac{10000}{36000}\bullet\frac{100}{1}$		$\frac{A}{B}=\frac{10000}{62800}\bullet\frac{50}{1}$	
6	Parameter settings	Fn__0F	10	Fn__0F	1000	Fn__0F	5000
		Fn__10	6	Fn__10	36	Fn__10	628

5.2.6 Selection of Multistage Electronic Gear Ratio

DS series of drivers internally support four-stage electronic gear ratio switching, and specific selection is shown in Table.

Electronic Gear Ratio Selection Input 1	Electronic Gear Ratio Selection Input 2	Selected Gear Ratio
Undefined	Undefined	Fn__0F / Fn__10
OFF	OFF	Fn__0F / Fn__10
ON	OFF	Fn__AD / Fn__10
OFF	ON	Fn__AE / Fn__10
ON	ON	Fn__AF/ Fn__10

5.2.7 Position Arrival Signal

If the absolute difference value between the number of command pulses sent by the command controller and the number of pulses during actual rotation of the motor is lower than the set value of the configuration parameter Fn_23, the output of the "position arrival" signal is valid.

Parameter	Description	Range	Unit	Default
Fn__23	Position deviation setpoint	0 ～ 2000	Pulse	1

5.2.8 Position Tolerance Alarm

If the absolute difference value between the number of command pulses sent by the command controller and the number of pulses during actual rotation of the motor is larger than the set value of the configuration parameter Fn_1D, the output of the position tolerance alarm occurs.

Parameter	Description	Range	Unit	Default
Fn__1D	Position deviation setpoint	0 ～ 10000	Pulse	0

5.2.9 Position Pulse Error Clearing

"Error Clearing PosErrorReset" signal is used to clear input signals of the position deviation counter.

Note: When a failure occurs, the error is temporarily retained for observation; and when the fault clearance signal reset operation is performed, the program will automatically clear errors, so as to re-run.

5.3 Running in the Speed Mode

5.3.1 Running in the External Analog Speed Command Mode

When the driver operates in the speed mode, the magnitude and direction of the motor rotating speed are determined according to the external analog given signal (-10V - +10V) of CN2-16, 1.

（1） **External Analog Speed Control Module Diagram**

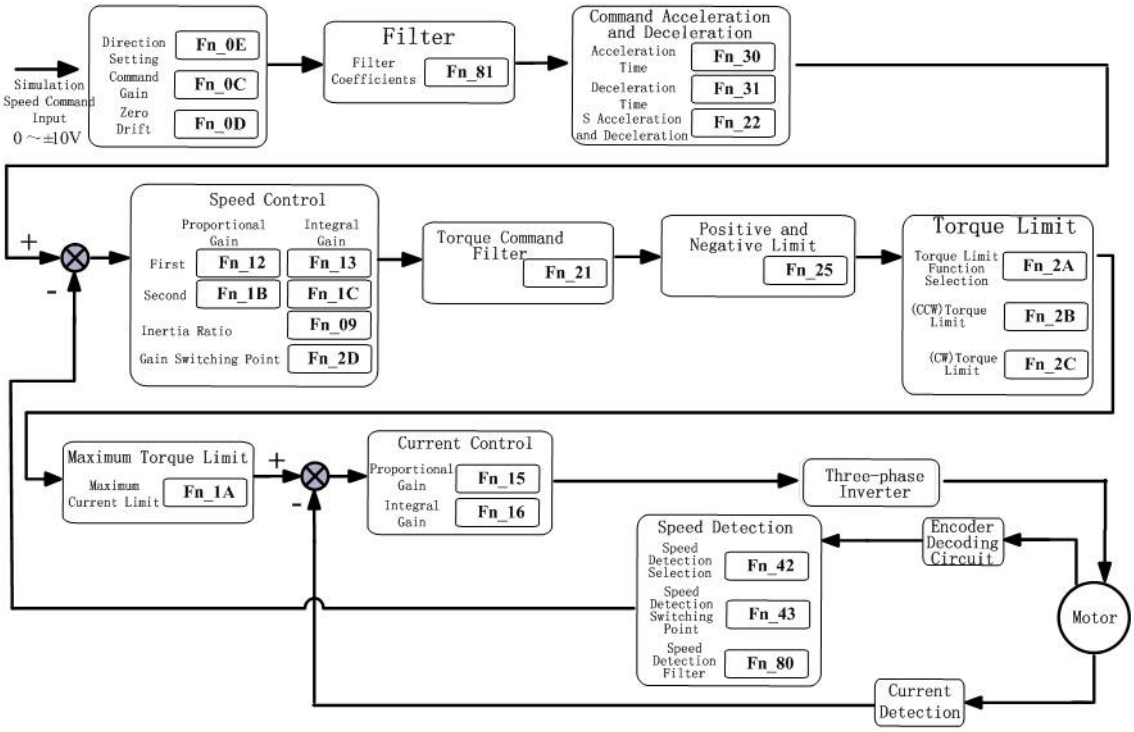

（2） **Speed Command Gain Adjustment**

The speed command gain can be configured via the configuration parameter Fn_0C.

Parameter	Description	Range	Unit	Default
Fn__0C	Gain Set Point of External Analog Speed Command	0 ～ 1000	RPM/V	300

（3） **Speed Command Offset Adjustment**

When the external analog speed mode is in use, as the analog command voltage, even if a 0V command is issued, the motor will also rotate at a low speed. This may occur when the command voltage of the superior control device or the external circuit has a slight amount (mV level) of offset. In this case, the command offset can be adjusted via the parameter Fn_0D.

Parameter	Description	Range	Unit
Fn__0D	Zero set point of external analog speed command	-2000 ～ 2000	0

（4） **Speed Command Direction Setting**

Users can switch the direction of the input speed command by configuring the parameter Fn_0E.

Parameter	Description	Range	Unit
Fn__0E	0：speed command direction no-invert 1：speed command direction invert	0 ～ 1	0

（5） **Low-pass Filter**

The analog speed command input passing through a low-pass filter can filter out high-frequency noises. If the set value is too small, the response will be reduced.

Parameter	Description	Range	Unit
Fn__81	Low-pass filter time constant, the smaller the parameter value, the stronger the filter.	32～1024	824

5.3.2 Running in the Internal Digital Speed Command Mode

When the driver operates in the speed mode, by inputting the combined state of signals of "Internal Speed Selection 1 Input", "Internal Speed Selection 2 Input" and "Internal Speed Selection 3 Input", select the 8-stage speed pre-set by the parameters Fn_33, Fn_35, Fn_37, Fn_39, Fn_4C, Fn_4D , Fn_4E and Fn_4F, to control the magnitude and direction of the motor speed.

（1） Internal digital speed control module chart.

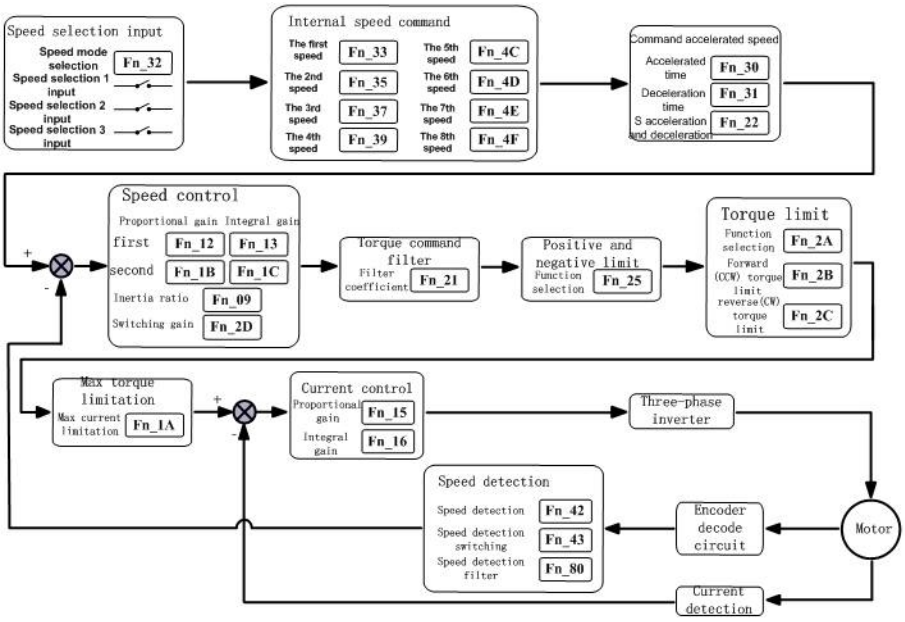

（2） Internal speed command register

Parameter No.	Parameter Description	Seting range	Unit	Default
Fn_33	Internal speed 1	-6000 ～ +6000	RPM	100
Fn_35	Internal speed 2	-6000 ～ +6000	RPM	100
Fn_37	Internal speed 3	-6000 ～ +6000	RPM	200
Fn_39	Internal speed 4	-6000 ～ +6000	RPM	-200
Fn_4C	Internal speed 5	-6000 ～ +6000	RPM	300
Fn_4D	Internal speed 6	-6000 ～ +6000	RPM	-300
Fn_4E	Internal speed 7	-6000 ～ +6000	RPM	400
Fn_4F	Internal speed 8	-6000 ～ +6000	RPM	-400

（3） Internal speed switching

Fn_32	Internal speed selection 1 input	Internal speed selection 2 input	Internal speed selection 3 input	Selected speed
3	OFF	OFF	OFF	Fn_33
	ON	OFF	OFF	Fn_35
	OFF	ON	OFF	Fn_37
	ON	ON	OFF	Fn_39
	OFF	OFF	ON	Fn_4C
	ON	OFF	ON	Fn_4D

	OFF	ON	ON	Fn_4E
	ON	ON	ON	Fn_4F
0	OFF	OFF	No Effect	Fn_33
	ON	OFF		Fn_35
	OFF	ON		Fn_37
	ON	ON		Fn_39

5.3.3 Acceleration/Deceleration Setting

The servo driver internally has the function that the input of the step speed command can be converted into input of a certain acceleration/deceleration command.

Parameter No.	Parameter Description	Seting range	Unit	Default
Fn_30	Motor acceleration time limit	0～5000	ms	100
Fn_31	Motor acceleration time limit	0～5000	ms	100
Fn_30：time from the stop state to the seting speed				
Fn_31：time from the setting speed to stop status				

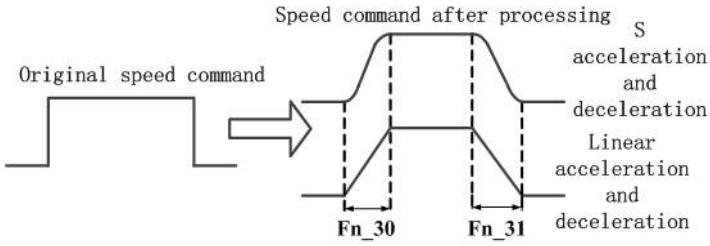

5.3.4 Use of the Zero-speed Given Function

If the zero speed given signal (ZeroSpeed) is set to ON, the speed command input value is ignored, and the servo motor is stopped in an emergency, so as to enter the state set by the parameter Fn_1F.

Parameter No.	Parameter description	Range	Default
Fn_1F	Zero-speed given motor running mode 0：motor stops running and lock shaft	0 ～ 1	0

	1：motor stops running, windings power off and in a free offline status.		

5.4 Running in the Torque Mode

5.4.1 Running in the External Analog Torque Command Mode

When the driver operates in the torque mode, the magnitude and direction of the running torque of the motor are determined according to the external analog given signal (-10V - +10V) of CN2-43, 1.

External analog torque control module chart.

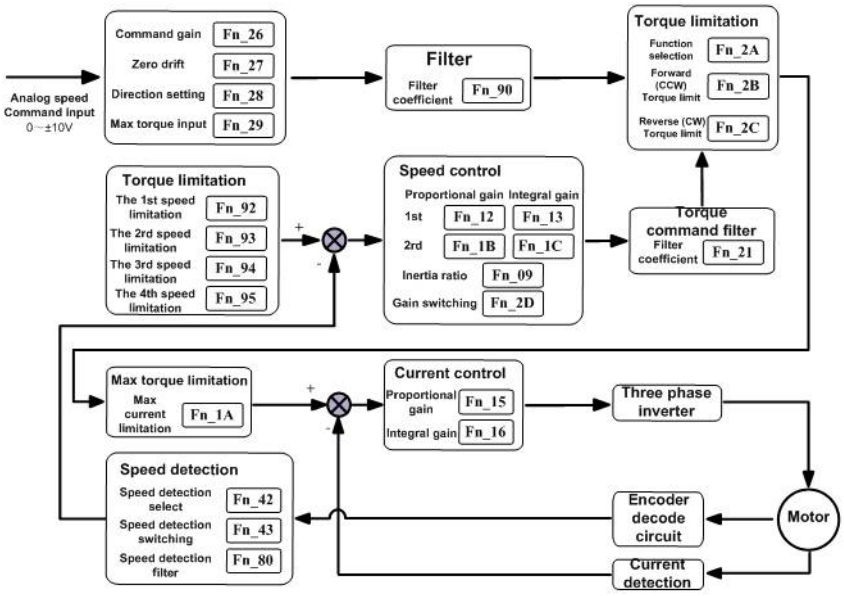

（1） **Torque Command Gain Adjustment**

The torque command gain can be configured via the configuration parameter Fn_26:

Parameter No.	Parameter description	Range	Default	Parameter No.
Fn__26	Set the maximum torque of parameter Fn __29 which correspond to analog torque to input voltage value.	10 ～ 100	0.1V	100

（2） **Torque Command Offset Adjustment**

（3） When the external analog torque mode is in use, as the analog command voltage, even if a 0V command is issued, the output torque of the motor is not necessarily zero. This may occur when the command voltage of the superior

control device or the external circuit has a slight amount (mV level) of offset. In this case, the command offset can be adjusted by modifying the configuration parameter Fn_27 (analog torque command ADC zero drift).

Parameter No.	Parameter Description	Range	Default
Fn__27	Zero point settings of external analog torque eliminate the error caused by zero drift according to the specific needs.	-1000 ～ +1000	0

（4） Torque Command Direction Setting

Users can switch the direction of the input torque command by configuring the parameter Fn_5D; in case of Fn_5D=0, the torque direction is determined by the polarity of the external analog torque command; and in case of Fn_5D=1, the torque direction is determined by "Torque Direction Select Input 1" and "Torque Direction Select Input 2" of the input/output terminal CN2.

Fn_5D	Torque direction Select 1 input	Torque direction Select 2 input	Torque direction	Motor direction	
				CCW	CW
1	OFF	OFF	zero torque	Stop	Stop
	ON	OFF	Forward torque	Drive mode	Regenerative braking mode
	OFF	ON	Reverse torque	Regenerative braking mode	Drive mode
	ON	ON	zero torque	Stop	Stop

（5） Low-Pass Filter

The analog torque command input can filter out high-frequency noises through a low-pass filter. If the set value is too large, the response will be reduced.

Parameter No.	Parameter Description	Range	Unit	Default
Fn__90	The first torque command low-pass filter time constant	32～1024	10us	824

5.4.2 Speed Limit during Torque Control

Since the torque command is only output to the servo motor during torque control, it is not need to deal with the motor speed. If the torque command is greater than the load torque at the mechanical side, it will cause over-speed of the motor. As a protective measure for the mechanical side, the function for restricting the rotating speed of the servo motor during torque control is provided.

DS series of servo drivers provide the functions of internal multistage speed limit and external analog speed limit.

1) The function of external analog speed limit can restrict motor speed via an external analog signal; at this time, the external analog speed channel serves as a source of external analog speed limit commands and is used for configuration of the gain, zero point, direction and filtering characteristics and the configuration of external analog

speed commands.

2) For the internal multistage speed limit, 4-stage speed pre-set by users via parameters Fn_91, Fn_92, Fn_93, Fn_94 and Fn_95 is selected by inputting the combined state of the input signal SpeedLimit1/2, as shown in Table.

Fn_91	SpeedLimit 1 Input	SpeedLimit 2 Input	Selected Speed Limit Value
0	No Effect	No Effect	External Analog Speed Limit (Analog Speed Command Channel)
1	OFF	OFF	Fn_92
	ON	OFF	Fn_93
	OFF	ON	Fn_94
	ON	ON	Fn_95

Chapter Ⅵ Parameter and Function

6.1 Fn parameter list

The parameter encoding and definition of Fn

Association Pattern			Parameter Coding	Definition
P	S	T	Fn__00	Control Mode Selection
P	S	T	Fn__01	Motor Rated Speed
P	S	T	Fn__02	Motor Pole Pairs
P	S	T	Fn__03	Rated Torque
P	S	T	Fn__04	Speed Error Limiting Figure
P	S	T	Fn__05	Rated Phase Current
P	S	T	Fn__06	Back-emf Compensation Factor
P	S	T	Fn__07	Motor Current Feedback Coefficient
P	S	T	Fn__08	Current Error Limiting Figure
P	S	T	Fn__09	Load Inertia Coefficient
P	S	T	Fn__0A	Encoder Line
P	S	T	Fn__0B	Encoder Angle Offset
	S		Fn__0C	Analog Speed Command Input Gain
	S		Fn__0D	Analog Speed Command Zero Drift Adjustment
P	S	T	Fn__0E	Direction Command Negated
P			Fn__0F	Fisrt Electronic Gear Ratio Numerator
P			Fn__10	Electronic Gear Ratio Denominator
P			Fn__11	Speed Feedforward Coefficient
P	S		Fn__12	The first speed loop propotional gain
P	S		Fn__13	The first speed loop integral gain
P	S		Fn__14	Position pulse command filter coefficient
P	S	T	Fn__15	Current loop proportional gain
P	S	T	Fn__16	Current loop integral gain
P			Fn__17	Position loop proportional gain
P	S	T	Fn__18	2 times overload protection time
P			Fn__19	Position command smoothing filter coefficient
P	S	T	Fn__1A	Maximum given current
P	S		Fn__1B	The second speed loop propotional gain
P	S		Fn__1C	The second speed loop integral gain
P			Fn__1D	Position error limit (the number of feedback pulses)
P	S		Fn__1E	Zero speed judgment threshold
P	S	T	Fn__1F	Brake enable or zero speed output
P			Fn__20	Position feedforward filter time constant
P	S	T	Fn__21	Torque command filter time constant
P	S	T	Fn__22	reserved
P			Fn__23	Position reached deviation setting value
	S		Fn__24	Speed reached setting value
P	S	T	Fn__25	CW/CCW disable function enable
		T	Fn__26	Analog torque input gain
		T	Fn__27	Analog torque command zero drift adjustment
		T	Fn__28	Anti-torque command direction

		T	Fn__29	Maximum torque under torque control mode
P	S	T	Fn__2A	Torque limit enable
P	S	T	Fn__2B	CCW torque limit
P	S	T	Fn__2C	CW torque limit
P	S		Fn__2D	The first\second speed loop gain switching point
P			Fn__2E	Pulse input mode selection
P	S	T	Fn__2F	Motor feedback output frequency
	S		Fn__30	Acceleration time
	S		Fn__31	Deceleration time
	S		Fn__32	Internal speed operation mode selection
	S		Fn__33	Internal speed 1
	S		Fn__34	Motor encoder UVW feedback logical selection
	S		Fn__35	Internal speed 2
P			Fn__36	Motor encoder AB feedback logical selection
	S		Fn__37	Internal speed 3
P	S	T	Fn__38	Internal enable
	S		Fn__39	Internal speed 4
P	S	T	Fn__3A	Servo communication station site
	S		Fn__3B	JOG speed setting
P	S	T	Fn__3C	Communication baud rate setting
P	S	T	Fn__3D	Communication mode and site number
P	S	T	Fn__3E	Load factory settings
P	S	T	Fn__3F	User password
P	S	T	Fn__40	Motor encoder type
P	S	T	Fn__41	Motor current input channel selection
P	S	T	Fn__42	Motor feedback speed calculation method selection
P	S	T	Fn__43	Motor feedback speed calculation switching point
P	S	T	Fn__44	PWM modulation frequency
P	S	T	Fn__45	Servo enabled default display selection
P	S	T	Fn__46	Encoder feedback Z pulse output width setting
P	S	T	Fn__47	Encoder feedback Z pulse output logical setting
P	S	T	Fn__48	Encoder feedback AB output logical setting
P			Fn__49	Position pulse command octave selection under position mode
P	S	T	Fn__4A	PWMDAC output channel 1 output selection
P	S	T	Fn__4B	PWMDAC output channel 2 output selection
	S		Fn__4C	Internal speed 5
	S		Fn__4D	Internal speed 6
	S		Fn__4E	Internal speed 7
	S		Fn__4F	Internal speed 8
P	S	T	Fn__50	Servo alarm enable 1
P	S	T	Fn__51	Reserved
P	S	T	Fn__52	Reserved
P	S	T	Fn__53	Reserved
P	S	T	Fn__54	PWM overmodulation selection
P	S	T	Fn__55	PWMDAC output channel 1 output gain
P	S	T	Fn__56	PWMDAC output channel 1 output offset
P	S	T	Fn__57	PWMDAC output channel 2 output gain
P	S	T	Fn__58	PWMDAC output channel 2 output offset

P	S	T	Fn__59	Enable invalid, motor brake operation time
P	S	T	Fn__5A	Enable switched, motor brake operation time
P	S	T	Fn__5B	Stall warning level
P	S	T	Fn__5C	Overload warning level
P	S	T	Fn__5D	Torque command direction selection
P	S	T	Fn__5E	Bleeder average power protection threshold
P	S	T	Fn__5F	Bleeder instantaneous power protection threshold
P	S	T	Fn__60	Enable delay time
P	S	T	Fn__61	Relay threshold
P	S	T	Fn__62	Relay release threshold
P	S	T	Fn__63	Overvoltage alarm threshold
P	S	T	Fn__64	Bleed start threshold
P	S	T	Fn__65	Bleed stop threshold
P	S	T	Fn__66	DC bus voltage detection low pass filter constant
P	S	T	Fn__67	3-phase AC input lost phase detection filter constant
P	S	T	Fn__68	Overvoltage detection filter constant
P	S	T	Fn__69	Undervoltage detection filter constant
P	S	T	Fn__6A	Discharge detection filter constant
P	S	T	Fn__6B	Relay delay time
P	S	T	Fn__6C	Output1 output logical selection and output function definition
P	S	T	Fn__6D	Output2 output logical selection and output function definition
P	S	T	Fn__6E	Output3 output logical selection and output function definition
P	S	T	Fn__6F	Output4 output logical selection and output function definition
P	S	T	Fn__70	Input1 input logical selection and input function definition
P	S	T	Fn__71	Input2 input logical selection and input function definition
P	S	T	Fn__72	Input3 input logical selection and input function definition
P	S	T	Fn__73	Input4 input logical selection and input function definition
P	S	T	Fn__74	Input5 input logical selection and input function definition
P	S	T	Fn__75	Input6 input logical selection and input function definition
P	S	T	Fn__76	Input7 input logical selection and input function definition
P	S	T	Fn__77	Input8 input logical selection and input function definition
P	S	T	Fn__78	Input1 input digital filter
P	S	T	Fn__79	Input2 input digital filter
P	S	T	Fn__7A	Input3 input digital filter
P	S	T	Fn__7B	Input4 input digital filter
P	S	T	Fn__7C	Input5 input digital filter
P	S	T	Fn__7D	Input6 input digital filter
P	S	T	Fn__7E	Input7 input digital filter
P	S	T	Fn__7F	Input8 input digital filter
P	S	T	Fn__80	Speed feedback low-pass filter time constant

	S		Fn__81	External analog speed command low-pass filter time constant
P	S	T	Fn__82	Maximum operating speed of the system
P	S	T	Fn__83	The third speed loop proportional gain
P	S	T	Fn__84	The third speed loop integral gain
P	S	T	Fn__85	External analog speed command, zero speed input threshold
P	S	T	Fn__86	Speed loop anti-jamming coefficient
P	S	T	Fn__87	Speed loop derivative gain
P	S	T	Fn__88	Speed loop PID calculation selection
P	S	T	Fn__89	Zero speed reached filter constant
P	S	T	Fn__8A	Speed loop differential low-pass filter time constant
P	S	T	Fn__8B	EC alarm threshold number
P	S	T	Fn__8C	Electronic oscilloscope channel 1 source selection
P	S	T	Fn__8D	Electronic oscilloscope channel 2 source selection
P	S	T	Fn__8E	Electronic oscilloscope channel 3 source selection
P	S	T	Fn__8F	Electronic oscilloscope channel 4 source selection
		T	Fn__90	External analog torque command low-pass filter time constant
		T	Fn__91	Speed limit source selection under torque mode
P	S	T	Fn__92	Speed limit 1 under torque mode
P	S	T	Fn__93	Speed limit 2 under torque mode
P	S	T	Fn__94	Speed limit 3 under torque mode
P	S	T	Fn__95	Speed limit 4 under torque mode
P	S	T	Fn__A2	Modify the curve deceleration point
P	S	T	Fn__A3	Position command corresponding to the maximum speed
P	S	T	Fn__A5	Position command curve type
P	S	T	Fn__A7	Position command decoupling coefficient
P	S	T	Fn__A8	Position command decoupling low-pass filter time constant
P	S	T	Fn__A9	Position command decoupling algorithm selection
P	S	T	Fn__AD	The second electronic gear ratio
P	S	T	Fn__AE	The third electronic gear ratio
P	S	T	Fn__AF	The forth electronic gear ratio
P	S	T	Fn__F0	OC alarm threshold number
P	S	T	Fn__F1	OC alarm filter number

6.2 Parameter Dn List

The parameter encoding and definition of Dn

Association Pattern			Parameter Coding	Definition
P	S	T	dn__00	Current measured speed（rpm）
P	S	T	dn__01	Position pulse frequency（KHz）
P	S	T	dn__02	Motor effective torque rate（‰）
P	S	T	dn__03	Retention pulse number（position deviation）
P	S	T	dn__04	Motor rotor position
P	S	T	dn__05	Speed command voltage value（0.01V）
P	S	T	dn__06	Torque command voltage value （0.01V）
P	S	T	dn__07	Current speed given value（rpm）
P	S	T	dn__08	DSP software version number
P	S	T	dn__09	System control mode
P	S	T	dn__0A	DC bus voltage
P	S	T	dn__0B	Mid-current
P	S	T	dn__0C	System running time (minute)
P	S	T	dn__0D	The total numberof receiving position command pulses
P	S	T	dn__0E	The pulse number of feedback position
P	S	T	dn__0F	Encoder feedback UVW
P	S	T	dn__10	I/O status
P	S	T	dn__11	DC bus relay status
P	S	T	dn__12	Alarm message
P	S	T	dn__1F	FPGA program version number

Note : association pattern:

P：position control mode

S：speed control mode (including internal speed control mode and external speed control mode)

T：torque control mode

6.3 The parameter Fn detail

Fn__00 ★	**Name**	Control mode selection	**Attribute**	Adjustable	**Association Mode**	P	S	T	
	Range	0~10	**Unit**		**Factory Setting**	2			

0：External speed operation mode. According to the external analog CN2-16,17 and given signal from -10V to 10V to determine the magnitutde and direction of motor rotation speed.

1 ： Internal speed operation mode. According to the parameters F33,Fn_35,Fn_37,Fn_39 and CN2-9,CN2-25 port status to determine motor speed and direction.

2 ： Position pulse operation mode which receiving an external position command pulse and direction level signal input.

3 ： JOG operation mode to determine motor speed by setting parameter Fn_3b. Press the▼and▲ on the keyboard to control the motor rotation direction.

4 ： Torque control operation mode. External analog CN2-43, 1 and given signal from -10V to 10V to determine the motor rotation torque magnitude and direction.

5～10: Mixed control operation mode which according to the CN2-24 input port status to select:

Fn__00	CN2-24 Interface Status	
	Off(first mode)	On(second mode)
5	Location pulse mode	External speed operation mode
6	Location pulse mode	Internal speed operation mode
7	Location pulse mode	Torque control mode
8	Internal speed operation mode	External speed operation mode
9	Internal speed operation mode	Torque control mode
10	External speed operation mode	Torque control mode

Fn__01	**Name**	Motor rated speed	**Attribute**	Read only	**Association Mode**	P	S	T	
	Range	100~8000	**Unit**	rpm	**Factory Setting**				
Servo motor parameters have been set before it leaves the factory,please do not adjust.									
Fn__02	**Name**	Motor poles	**Attribute**	Read only	**Association Mode**	P	S	T	
	Range	1~20	**Unit**		**Factory Setting**				
Servo motor parameters have been set before it leaves the factory,please do not adjust.									
Fn__03	**Name**	Motor rated torque	**Attribute**	Read only	**Association Mode**	P	S	T	
	Range	1~10000	**Unit**	0.01Nm	**Factory Setting**				
Servo motor parameters have been set before it leaves the factory,please do not adjust.									
Fn__04	**Name**	Speed error limit	**Attribute**	Read only	**Association Mode**	P	S		

	Range	0~1000	**Unit**	rpm	**Factory Setting**				
Servo motor parameters have been set before it leaves the factory,please do not adjust.									
Fn__05	**Name**	Motor rated phase current	**Attribute**	Read only	**Association Mode**	P	S	T	
	Range	1~10000	**Unit**	**10mA**	**Factory Setting**				
Servo motor parameters have been set before it leaves the factory,please do not adjust.									
Fn__06	**Name**	Back EMF compensation coefficient	**Attribute**	Read only	**Association Mode**	P	S	T	
	Range	0~100	**Unit**		**Factory Setting**				
Servo motor parameters have been set before it leaves the factory,please do not adjust.									
Fn__07	**Name**	Current feedback gain coefficient	**Attribute**	Read only	**Association Mode**	P	S	T	
	Range	1~10000	**Unit**		**Factory Setting**				
Servo motor parameters have been set before it leaves the factory,please do not adjust.									
Fn__08	**Name**	Regulators compensation coefficient	**Attribute**	Read only	**Association Mode**	P	S	T	
	Range	0~1000	**Unit**		**Factory Setting**				
Servo motor parameters have been set before it leaves the factory,please do not adjust.									
Fn__09	**Name**	Load inertia coefficient	**Attribute**	Adjustable	**Association Mode**	P	S		
	Range	100~1000	**Unit**		**Factory Setting**	200			
Description load inertia parameters: referring to the load inertia increase or decrease the parameter, when the motor is no-load, the minimum parameter is 100.									
Fn__0A	**Name**	Encoder lines	**Attribute**	Read only	**Association Mode**	P	S	T	
	Range	200~5000	**Unit**		**Factory Setting**	2500			
Servo motor parameters have been set before it leaves the factory,please do not adjust.									
Fn__0B	**Name**	Encoder angle offset	**Attribute**	Read only	**Association Mode**	P	S	T	
	Range	-5000~5000	**Unit**		**Factory Setting**	0			
Servo motor parameters have been set before it leaves the factory,please do not adjust.									
Fn__0C	**Name**	Speed command input gain	**Attribute**	Adjustable	**Association Mode**		S		
	Range	0~1000	**Unit**		**Factory Setting**				
external analog speed adjust parameters: ±10V corresponds to the actual motor speed＝Fn__0C×[±10V＋Fn__0D] rpm									

Fn__0D	**Name**	Speed command zero offset adjustment	**Attribute**	Adjustable	**Association Mode**		S		
	Range	-2000~2000	**Unit**	mV	**Factory Setting**	0			
In the external analog speed mode, when the external analog command voltage is 0V, the motor is still rotating, you need to adjust Fn__0D.									
Fn__0E	**Name**	Direction command in reverse /zero speed signal input logic	**Attribute**	Adjustable	**Association Mode**	P	S		
	Range	0~1	**Unit**		**Factory Setting**	0			
0：Drive internal default direction definition;1：change the direction of motor rotation in the mode of speed and position pulse									
Fn__0F	**Name**	The first section gear ratio	**Attribute**	Adjustable	**Association Mode**	P			
	Range	1~9999	**Unit**		**Factory Setting**	1			
Position mode electronic gear ratio: 4×motor encoder feedback pulse frequency＝command pulse frequency×Fn__0F/Fn__10 The proportional value of Fn__0F/F__10 is required between 1/100 to 100									
Fn__10	**Name**	Electronic gear ratio denominator	**Attribute**	Adjustable	**Association Mode**	P			
	Range	1~9999	**Unit**		**Factory Setting**	1			
See F0F									
Fn__11	**Name**	Velocity feedforward coefficient (%)	**Attribute**	Adjustable	**Association Mode**	P			
	Range	0~2000	**Unit**		**Factory Setting**	0			
Position mode velocity feedforward coefficient: the larger the parameter **Fn__11, the higer the position loop response characteristic and location tracking features, but the system may be unstable, easily overshoot or oscillation.**									
Fn__12	**Name**	The first speed loop proportional gain	**Attribute**	Adjustable	**Association Mode**	P	S		
	Range	1~1000	**Unit**		**Factory Setting**				
The first speed loop regulator gain parameter is applicable for a given speed larger than the parameter Fn__2d. Parameter value is determined according to the load. The greater the load inertia, the larger the value, the higher the gain, the faster the speed response. * in the case of no oscillations and noise in the system, the parameter values is set as large as possible.									
Fn__13	**Name**	The first speed loop integral gain	**Attribute**	Adjustable	**Association Mode**	P	S		

	Range	0~1000	**Unit**		**Factory Setting**				
The first speed loop regulator integral gain is applicable for a given speed larger than the value of Fn__2d. * parameter value is determined according the load, the greater the load inertia, the smaller the vaule, the larger the parameter, the faster the speed of the speed error integral, the higher the speed ring stiffness. * in the case of no oscillations in the system, the parameter values is set as large as possible.									
Fn__14	**Name**	Position command pulse noise filtering	**Attribute**	retention	**Association Mode**	P	S		
	Range	1~100	**Unit**		**Factory Setting**	4			
The larger the value, the stronger the filtering effect, but the pulse frequency is reduced. See section 5.2.3									
Fn__15 ★	**Name**	The first current loop proportional gain	**Attribute**	Read only	**Association Mode**	P	S	T	
	Range	0~1000	**Unit**		**Factory Setting**				
Current loop parameters									
Fn__16 ★	**Name**	The first current loop integral gain	**Attribute**	Read only	**Association Mode**	P	S	T	
	Range	0~1000	**Unit**		**Factory Setting**				
Current loop parameters									
Fn__17	**Name**	Position loop proportional gain	**Attribute**	Adjustable	**Association Mode**	P			
	Range	0~5000	**Unit**		**Factory Setting**	2000			
Position loop regulator proportional gain parameters: Parameter value is determined based on the load, the larger the value,the greater the gain, the larger the stiffness. * there is no oscillation in the system, the value of the parameter is set as large as possible.									
Fn__18	**Name**	2 times overload time	**Attribute**	Read only	**Association Mode**	P	S	T	
	Range	10~200	**Unit**	0.1S	**Factory Setting**	100			
When the motor overload time exceed the value of Fn__18, the “Er_OL” alarm.									
Fn__19	**Name**	Position pulse command smooth filtering time constant	**Attribute**	Adjustable	**Association Mode**	P			
	Range	1~1024	**Unit**		**Factory Setting**				
The parameter is applicable to : 1. electronic gear is relatively large(greater than 10-fold) 2. the host computer output pulse can not be acceleration or deceleration. The default parameter is 1024, that is no smooth filtering, the smaller the parameter vaule, the better the smoothing effect. Note: the filter does not affect the total number of pulse command, but will affect the response speed of the motor.									

Fn__1A	**Name**	Maximum current for given	**Attribute**	Read only	**Association Mode**	P	S	T	
	Range	0~10000	**Unit**	10 mA	**Factory Setting**				
Servo drive output maximum current limits									
Fn__1B	**Name**	The second speed loop proportional gain	**Attribute**	Adjustable	**Association Mode**	P	S		
	Range	0~1000	**Unit**		**Factory Setting**				
The second speed loop regulator parameters are applicable for a given speed less than the value of F2d. Reference Fn_12									
Fn__1C	**Name**	The second speed loop integral gain	**Attribute**	Adjustable	**Association Mode**	P	S		
	Range	0~1000	**Unit**		**Factory Setting**				
The second speed loop regulator parameters are applicable for a given speed less than the value of F2d. Reference Fn_13									
Fn__1D	**Name**	Position error limit (position feedback pulses)	**Attribute**	Adjustable	**Association Mode**	P			
	Range	0~10000	**Unit**		**Factory Setting**	5000			
in the position mode, when the count value of the position deviation counter exceeds the set value, the servo dirve will appear tolerance alarm “PE”									
Fn__1E	**Name**	Zero speed threshold determination	**Attribute**	Adjustable	**Association Mode**	P	S	T	
	Range	0~1000	**Unit**	rpm	**Factory Setting**	0			
Under external speed, internal speed or position mode, when the motor speed is lower than this value, the zero speed signal is valid.									
Fn__1F	**Name**	Winding status when the motor is stopped after the zero speed signal input	**Attribute**	Adjustable	**Association Mode**	P	S	T	
	Range	0~1	**Unit**		**Factory Setting**	0			
0：after zero speed given signal input is enabled, motor zero speed or zero lock shaft, the motor is in the excitation status. 1：after zero speed given signal input is enabled, the motor firstly reaches zero speed or zero lock shaft, then disconnect the power.									
Fn__20	**Name**	Position feedforward filter time constant	**Attribute**	Adjustable	**Association Mode**	P			
	Range	32~1024	**Unit**		**Factory Setting**	1024			

Position pulse mode（F00＝2）: the parameter can control the response speed of position feedforward and overshoot. The smaller the parameter,the stronger the filtering. The default value is 1024, that is ,no filtering.									
Fn__21	**Name**	Torque command filter time constant	**Attribute**	Adjustable	**Association Mode**	P	S	T	
	Range	32~1024	**Unit**		**Factory Setting**	824			
Increasing this parameter can eliminate mechanical vibration, meanwhile the servo response reduce. The smaller the parameter value, the stronger the filtering.									
Fn__22	**Name**	Retention	**Attribute**	Adjustable	**Association Mode**		S		
	Range	0~1000	**Unit**		**Factory Setting**				
Retention									
Fn__23	**Name**	Location positioning deviation value	**Attribute**	Adjustable	**Association Mode**	P			
	Range	0~2000	**Unit**	1 pulse	**Factory Setting**	30			
In the position mode, when the value of the position deviation counter is less than or equal to F23 , the output position reach signal.									
Fn__24	**Name**	Speed reached set-value	**Attribute**	Adjustable	**Association Mode**		S		
	Range	0~8000	**Unit**	rpm	**Factory Setting**	1000			
In the speed mode, when the motor feedback speed is greater than or equal to F24, the output speed reach signal.									
Fn__25	**Name**	Reverse limit function	**Attribute**	Adjustable	**Association Mode**	P	S	T	
	Range	0~1	**Unit**		**Factory Setting**	0			
0：Reverse limit function is invalid in the speed or position mode. 1：Reverse limit function is valid in the speed or position mode									
Fn__26	**Name**	Analog torque intput gain	**Attribute**	Adjustable	**Association Mode**			T	
	Range	10~100	**Unit**	0.1V	**Factory Setting**	100			
Setting the analog torque input voltage which is corresponding to the maximum torque of the parameter F29									
Fn__27	**Name**	Torque command zero offset adjustment	**Attribute**	Adjustable	**Association Mode**			T	
	Range	-1000~1000	**Unit**	mV	**Factory Setting**	0			
Zero deviation compensation value of torque analog input									

Fn__28	**Name**	Torque command direction opposite	**Attribute**	Adjustable	**Association Mode**			T	
	Range	0~1	**Unit**		**Factory Setting**	0			
0： analog command is positive, the torque direction is CCW 1： when analog input polarity invert and analog command is positive, the torque direction is CW									
Fn__29	**Name**	Maximum torque in torque control mode	**Attribute**	Adjustable	**Association Mode**			T	
	Range	0~300	**Unit**	%	**Factory Setting**	100			
Correspondence between the analog input torque and the motor rated torque: maximum analog torque is equivalent to the percentage of the motor rated torque value of F03.									
Fn__2A	**Name**	Torque limit enable	**Attribute**	Adjustable	**Association Mode**	P	S	T	
	Range	0~1	**Unit**		**Factory Setting**	0			
0：torque limit function is invalid 1：internal torque limit is valid. See parameter F2b，F2c									
Fn__2B	**Name**	CCW torque limit	**Attribute**	Adjustable	**Association Mode**	P	S	T	
	Range	0~300	**Unit**		**Factory Setting**	100			
Correspondence between the torque limit value and motor rated torque: torque limit value is equivalent to the percentage of the motor rated torque value of F03									
Fn__2C	**Name**	CW torque limit	**Attribute**	Adjustable	**Association Mode**	P	S	T	
	Range	0~300	**Unit**		**Factory Setting**	100			
Correspondence between the torque limit value and motor rated torque: torque limit value is equivalent to the percentage of the motor rated torque value of F03									
Fn__2D	**Name**	Speed loop first and second gain switching cut-off point	**Attribute**	Adjustable	**Association Mode**	P	S		
	Range	0~3000	**Unit**	rpm	**Factory Setting**	0			
Segmentation gain switching point(RPM), this parameter is usually set in a large inertia load.									
Fn__2E	**Name**	Pulse input mode selection	**Attribute**	Adjustable	**Association Mode**	P			
	Range	1~6	**Unit**		**Factory Setting**	1			

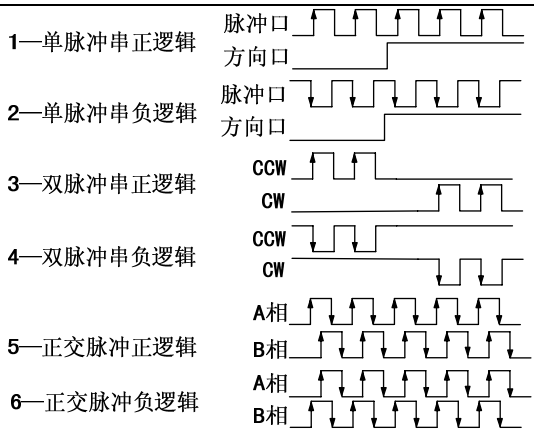

Fn__2F	**Name**	Motor encoder feedback signal output frequency division	**Attribute**	Adjustable	**Association Mode**	P	S	T	
	Range	0~2500	**Unit**		**Factory Setting**	2500			
Motor feedback encoder signal output frequency, pulses / revolution									
Fn__30	**Name**	Acceleration time (ms)	**Attribute**	Adjustable	**Association Mode**		S		
	Range	0~5000	**Unit**		**Factory Setting**	100			
Motor acceleration time is from 0rpm to 1000rpm									
Fn__31	**Name**	Deceleration time (ms)	**Attribute**	Adjustable	**Association Mode**		S		
	Range	0~5000	**Unit**		**Factory Setting**	100			
Motor deceleration time is from 1000rpm to 0rpm.									
Fn__32	**Name**	Speed mode operation selection	**Attribute**	Adjustable	**Association Mode**		S		
	Range	0~4	**Unit**		**Factory Setting**	0			
0：F00＝1, four-internal speed operation mode 1：F00＝1, single-speed start-stop control mode 2：F00＝1, single-speed CCW/CW/stop control 3：F00＝1, eight internal speed operation mode 4：F00＝0, analog+speed control mode									
Fn__33	**Name**	Internal speed 1	**Attribute**	Adjustable	**Association Mode**		S		
	Range	-6000~6000	**Unit**	rpm	**Factory Setting**	100			
First internal speed in the internal speed mode									
Fn__34	**Name**	Motor encoder UVW feedback logic setting	**Attribute**	Read-only	**Association Mode**		S		

	Range	0~1	**Unit**		**Factory Setting**				
0：positive logic　1：negative logic									
Fn__35	**Name**	Internal speed 2	**Attribute**	Adjustable	**Association Mode**		S		
	Range	-6000~6000	**Unit**	rpm	**Factory Setting**	100			
Second internal speed in the internal speed mode									
Fn__36	**Name**	retention	**Attribute**	Read-only	**Association Mode**	P			
	Range	retention	**Unit**		**Factory Setting**	0			
Fn__37	**Name**	Internal speed 3	**Attribute**	Adjustable	**Association Mode**		S		
	Range	-6000~6000	**Unit**	rpm	**Factory Setting**	200			
The third internal speed in the internal speed mode									
Fn__38	**Name**	Servo enable	**Attribute**	Adjustable	**Association Mode**	P	S	T	
	Range	0~1	**Unit**		**Factory Setting**	0			
0：external IO enable effective　1：internal enable effective									
Fn__39	**Name**	Internal speed 4	**Attribute**	Adjustable	**Association Mode**		S		
	Range	-6000~6000	**Unit**	rpm	**Factory Setting**	-200			
the forth internal speed in the internal speed mode									
Fn__3A	**Name**	Servo communication station site	**Attribute**	Adjustable	**Association Mode**	P	S	T	
	Range	0~19999	**Unit**		**Factory Setting**	0			
Fn__3B	**Name**	JOG speed setting	**Attribute**	Adjustable	**Association Mode**				
	Range	0~7500	**Unit**	rpm	**Factory Setting**	100			
JOG running speed settings, if the parameter is greater than 500，the actual default JOG speed up to 500rpm									
Fn__3C	**Name**	Servo communication baud rate	**Attribute**	Adjustable	**Association Mode**	P	S	T	

Fn__3A set value	communication
0xxxx	No station number of communication protocols
1xxxx	No station number of communication protocols
Xxxx: station address number，0≤xxxx≤127，xxxx＝0 broadcast address	

	Range	0~6	Unit		Factory Setting	0

0：2400 bps； 1：9600 bps； 2：38400 bps； 3：57600 bps； 4：115200bps；
5：19200 bps；6：512000bps；

Fn__3D	Name	Servo communication protocols and communication port selection	Attribute	Adjustable	Association Mode	P	S	T
	Range	0~131	Unit		Factory Setting	0		

Fn__3D set value	communication
000	RS232 Stone_Link
001	RS232 ModBus_RTU
002	RS232 ModBus_ASCII
100	RS485 Stone_Link
101	RS485 ModBus_RTU
102	RS485 ModBus_ASCII
X03	CAN CanOpen

Fn__3E	Name	Factory settings	Attribute	Adjustable	Association Mode	P	S	T
	Range	0~1399	Unit		Factory Setting			

0xxx－No operation；1xxx－ Load factory defaults, load factory default, power on again before it is implemented. Xxx is servo motor number which is defined as follows:

Motor number	Servo motor model	Motor number	Servo motor model
010	60CB020C	050	120MB075B
011	60CB040C	051	120MB100B
012	60CB060C	052	120MB150B
		053	120MB200B
		054	120MB300B
020	80CB050C		
021	80CB075C	060	120MB110C
022	80CB100C	061	120MB150C
		062	120MB220C
		063	120MB300C
030	90CB050C		
031	90CB075C	100	110MB040A
032	90CB100C	101	110MB060D
033	90CB120C	102	110MB075D
		106	110MB120C
040	120MB040A	150	130MB075D

041	120MB055A	103	130MB100A
042	120MB075A	104	130MB100B
043	120MB100A	105	130MB100C
044	120MB150A	107	130MB200B
		108	130MB150B
120	130MB300B(7)	121	130MB300C(7)
218	130HMB10015(3)	222	180HMB21520(3)
219	130HMB15015(3)	223	180HMB27020(3)
220	130HMB15025(3)	224	180HMB48015(3)
221	180HMB19015(3)	230	220HMB67010(3)
240	150HMB380E	242	150HMB460B
241	150HMB360B	243	150HMB540B

Fn__3F	**Name**	Password protection	**Attribute**	Adjustable	**Association Mode**	P	S	T	
	Range	0~9999	**Unit**		**Factory Setting**	9870			
Password protection system parameters									
Fn__40	**Name**	Motor encoder type	**Attribute**	Read-only	**Association Mode**	P	S	T	
	Range	0~1	**Unit**		**Factory Setting**	0			
0：2500 line incremental encoder 1：17 the absolute encoder TS5667N120									
Fn__41	**Name**	Motor current input channel selection	**Attribute**	Read-only	**Association Mode**	P	S	T	
	Range	0~2	**Unit**		**Factory Setting**	2			
0：A channel 1：B channel 2：A,B channel automatic switching									

Fn__42	**Name**	Motor feedback velocity calculation method selection	**Attribute**	Read-only	**Association Mode**	P	S	T	
	Range	0~2	**Unit**		**Factory Setting**	1			
0：conventional algorithm 1: improved algorithm 2：two algorithms automatic switching									
Fn__43	**Name**	Motor feedback speed calculation switching point	**Attribute**	Read-only	**Association Mode**	P	S	T	
	Range	0~1000	**Unit**	rpm	**Factory Setting**	60			
Fn__42 = 2, speed switching point of conventional algorithms and improved algorithms automatica switching. Motor feedback speed is faster than Fn__43 setting value using the improved algorithm. Motor feedback speed is less than Fn__43 using the conventional algorithm.									

Fn__44	**Name**	PWM modulation frequency	**Attribute**	Read-only	**Association Mode**	P	S	T	
	Range	0~2	**Unit**		**Factory Setting**	0			
0：8KHz，1：16KHz 2：auto switch									
Fn__45	**Name**	LED default display selection after servo enable	**Attribute**	Adjustable	**Association Mode**	P	S	T	
	Range	0~31	**Unit**		**Factory Setting**	0			
0：d【00】 1：d【01】... ... 31：d【1F】									
Fn__46	**Name**	Z encoder feedback pulse output width setting	**Attribute**	Adjustable	**Association Mode**	P	S	T	
	Range	1~100	**Unit**		**Factory Setting**	1			
Fn_46 = 1, Z pulse output width is original pulse. When Fn_46 set other values, Z pulse output width = A pulse width cycle* Fn_46									
Fn__47	**Name**	Z encoder feedback pulse output logic setting	**Attribute**	Adjustable	**Association Mode**	P	S	T	
	Range	0~1	**Unit**		**Factory Setting**	1			
0：negative logic 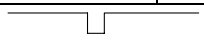 ，1：positive logic 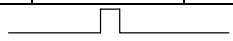									
Fn__48	**Name**	Encoder feedback AB output logic setting	**Attribute**	Adjustable	**Association Mode**	P	S	T	
	Range	0~1	**Unit**		**Factory Setting**	0			
0：positive logic(A ahead of B)，1：negative logic(A behind of B)									
Fn__49	**Name**	Pulse command octave	**Attribute**	Adjustable	**Association Mode**	P			
	Range	0~1	**Unit**		**Factory Setting**	0			
0：no pulse command octave 1：pulse command octave									
Fn__4A	**Name**	PWMDAC output channel 1 output selection	**Attribute**	Adjustable	**Association Mode**	P	S	T	
	Range	0~9	**Unit**		**Factory Setting**	0			
0：speed command 1：speed feedback 2：motor U-phase current（large range）3: motor V-phase current（large range）4：motor W-phase current（large range） 5：motor U-phase current（small scale）6：motor V-phase current（small scale）7：motor W-phase（small scale） 8：current loop instruction（Iqref） 9：current loop feedback （Iqfb）									

Fn__4B	**Name**	PWMDAC output channel 2 output selection	**Attribute**	Adjustable	**Association Mode**	P	S	T	
	Range	0~9	**Unit**		**Factory Setting**	1			
See Fn__4A									
Fn__4C	**Name**	Internal speed 5	**Attribute**	Adjustable	**Association Mode**		S		
	Range	-6000~6000	**Unit**	rpm	**Factory Setting**	300			
The fifth internal speed in the internal speed mode									
Fn__4D	**Name**	Internal speed 6	**Attribute**	Adjustable	**Association Mode**		S		
	Range	-6000~6000	**Unit**	rpm	**Factory Setting**	-300			
The sixth internal speed in the internal speed mode									
Fn__4E	**Name**	Internal speed 7	**Attribute**	Adjustable	**Association Mode**		S		
	Range	-6000~6000	**Unit**	rpm	**Factory Setting**	400			
The seventh internal speed in the internal speed mode									
Fn__4F	**Name**	Internal speed 8	**Attribute**	Adjustable	**Association Mode**		S		
	Range	-6000~6000	**Unit**	rpm	**Factory Setting**	-400			
The eighth internal speed in the internal speed mode									
Fn__50	**Name**	Servo alarm enable 1	**Attribute**	Adjustable	**Association Mode**	P	S	T	
	Range	0~11111	**Unit**		**Factory Setting**	10111			
bits：LU alarm enable，ten：Ec alarm enable，on hundred：St alarm enable，one thousand：3-phase AC phase-lack enable, ten thousand：PE alarm enable									
Fn__51 ～ Fn__55	**Name**	retention	**Attribute**	Adjustable	**Association Mode**	P	S	T	
	Range	0~11111	**Unit**		**Factory Setting**				
Factory retention									
Fn__56	**Name**	PWMDAC output channel 1 output offset	**Attribute**	Adjustable	**Association Mode**	P	S	T	
	Range	-18750~18750	**Unit**		**Factory Setting**	0			
Adjust this parameter when PWMDAC output channel 1 and the output waveform zero offset									
Fn__57	**Name**	retention	**Attribute**	Adjustable	**Association Mode**	P	S	T	
	Range	0~11111	**Unit**		**Factory Setting**				
Factory retention									

Fn__58	**Name**	PWMDAC output channel 2 output offset	**Attribute**	Adjustable	**Association Mode**	P	S	T	
	Range	-18750~18750	**Unit**	ms	**Factory Setting**	0			
Adjust this parameter when PWMDAC output channel 1 and the output waveform zero offset									
Fn__59	**Name**	The motor brake operation time after enable ineffective	**Attribute**	Adjustable	**Association Mode**	P	S	T	
	Range	0~1000	**Unit**	ms	**Factory Setting**				
Fn__5A	**Name**	The motor brake release delay time after enable	**Attribute**	Adjustable	**Association Mode**	P	S	T	
	Range	0~1000	**Unit**	ms	**Factory Setting**				
The motor brake release delay time after servo enable									
Fn__5B	**Name**	Stall warning level	**Attribute**	Adjustable	**Association Mode**		S		
	Range	0~300	**Unit**	0.01 times rated speed	**Factory Setting**	120			
When the motor feedback is faster than Fn_5B *Fn_01/100 rpm, the drive “Er_St” alarm									
Fn__5C	**Name**	Overload warming level	**Attribute**	Adjustable	**Association Mode**	P	S	T	
	Range	0~300	**Unit**	0.01 times rated torque	**Factory Setting**	115			
When the motor feedback is faster than Fn_5C *Fn_03/100 rpm，the drive “Er_oL” alarm									
Fn__5D	**Name**	Torque direction selection in the torque mode	**Attribute**	Adjustable	**Association Mode**	P	S	T	
	Range	0~1	**Unit**		**Factory Setting**	0			
0：forward torque，1：reverse torque									
Fn__5E	**Name**	Bleed average power protection threshold	**Attribute**	Adjustable	**Association Mode**	P	S	T	
	Range	-1~1000	**Unit**	10ms	**Factory Setting**	200			
-1：cancel bleed average power protection other bleed average power protection threshold , the greater the value,the greater the discharge power									

Fn__5F	**Name**	Bleed instantaneous power protection threshold	**Attribute**	Adjustable	**Association Mode**	P	S	T	
	Range	-1~200	**Unit**	10ms	**Factory Setting**	100			
-1：cancel bleed instantaneous power protection other value is bleed instantaneous power protection threshold, the greater the value,the greater the discharge power									
Fn__60	**Name**	Enable delay time	**Attribute**	Adjustable	**Association Mode**	P	S	T	
	Range	0~2000	**Unit**	1ms	**Factory Setting**	500			
After the power of servo dirve is ready, then enable delay time.									
Fn__61	**Name**	Relay threshold	**Attribute**	Read-only	**Association Mode**	P	S	T	
	Range	0~1200	**Unit**	V	**Factory Setting**				
When the bus voltage is greater than Fn_61 set value and the time is greater than Fn_6B set time，relay close									
Fn__62	**Name**	Relay release threshold	**Attribute**	Read-only	**Association Mode**	P	S	T	
	Range	0~1200	**Unit**	V	**Factory Setting**				
When bus voltage is less than the set value of Fn_62 after the relay closing, the relay is disconnected and the drive “Er_LU” alarm.									
Fn__63	**Name**	Overvoltage alarm threshold	**Attribute**	Read-only	**Association Mode**	P	S	T	
	Range	0~1200	**Unit**	V	**Factory Setting**				
When bus voltage is greater than the set value of Fn_63 , the drive “Er_oU” alarm.									
Fn__64	**Name**	Relief start threshold	**Attribute**	Adjustable	**Association Mode**	P	S	T	
	Range	0~1000	**Unit**	V	**Factory Setting**				
When bus voltage is greater than the set value of Fn_64 , the drive relief start									
Fn__65	**Name**	Relief stop threshold	**Attribute**	Adjustable	**Association Mode**	P	S	T	
	Range	0~1000	**Unit**	V	**Factory Setting**				
When bus voltage is greater than the set value of Fn_65 , the drive relief stop									
Fn__66	**Name**	DC bus voltage detection low pass filter constant	**Attribute**	Adjustable	**Association Mode**	P	S	T	
	Range	32~1024	**Unit**		**Factory Setting**	624			

The smaller the parameter value,the stronger the filter.									
Fn__67	**Name**	3-phase AC input lack-phase detection filter constant	**Attribute**	Adjustable	**Association Mode**	P	S	T	
	Range	0~1000	**Unit**	1ms	**Factory Setting**	5			
3-phase AC input（L1，L2，L3）, the greater the parameter value, the stronger the filtering.									
Fn__68	**Name**	Overvoltage detection filter constant	**Attribute**	Adjustable	**Association Mode**	P	S	T	
	Range	1~2000	**Unit**	125us	**Factory Setting**	5			
The greater the parameter value, the stronger the filtering									
Fn__69	**Name**	Undervoltage detection filter constant	**Attribute**	Adjustable	**Association Mode**	P	S	T	
	Range	1~2000	**Unit**	125us	**Factory Setting**	5			
The greater the parameter value, the stronger the filtering									
Fn__6A	**Name**	Discharge detection filter constant	**Attribute**	Adjustable	**Association Mode**	P	S	T	
	Range	1~2000	**Unit**	125us	**Factory Setting**	5			
The greater the parameter value,the stronger the filtering									
Fn__6B	**Name**	Relay delay time	**Attribute**	Adjustable	**Association Mode**	P	S	T	
	Range	0~2000	**Unit**	125us	**Factory Setting**	5			
When the bus voltage is greater than the set value of the Fn_61 and the time is larger than the set value of the Fn_6B, the relay close.									
Fn__6C	**Name**	Output 1 Output logic selection and output functions	**Attribute**	Adjustable	**Association Mode**	P	S	T	
	Range	0~108	**Unit**		**Factory Setting**	1			

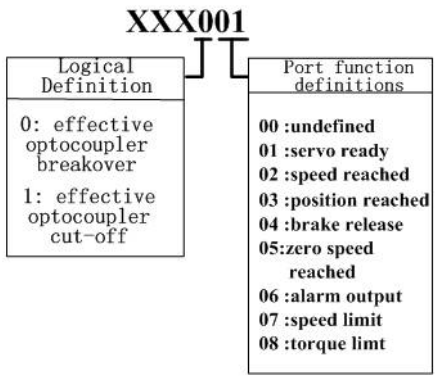

Fn__6D	**Name**	Output 2 Output logic selection and output functions	**Attribute**	Adjustable	**Association Mode**	P	S	T	
	Range	0~108	**Unit**		**Factory Setting**	3			
See Fn__6C									
Fn__70	**Name**	Input1 input logic selection and input function definition	**Attribute**	Adjustable	**Association Mode**	P	S	T	
	Range	0~115	**Unit**		**Factory Setting**	1			
Fn__71	**Name**	Input2 Input logic selection and input function definition	**Attribute**	Adjustable	**Association Mode**	P	S	T	
	Range	0~115	**Unit**		**Factory Setting**	2			
See Fn__70									
Fn__72	**Name**	Input3 Input logic selection and input function definition	**Attribute**	Adjustable	**Association Mode**	P	S	T	
	Range	0~115	**Unit**		**Factory Setting**	3			
See Fn__70									
Fn__73	**Name**	Input4 Input logic selection and input function definition	**Attribute**	Adjustable	**Association Mode**	P	S	T	
	Range	0~115	**Unit**		**Factory Setting**	4			
See Fn__70									

Fn__78	**Name**	Input1 enter the digital filter	**Attribute**	Adjustable	**Association Mode**	P	S	T	
	Range	0~1000	**Unit**	125us	**Factory Setting**				
Digital input port 1, input filter coefficient , the greater the parameter value,the stronger the filter									
Fn__79	**Name**	Input2 enter the digital filter	**Attribute**	Adjustable	**Association Mode**	P	S	T	
	Range	0~1000	**Unit**	125us	**Factory Setting**				
Digital input port 2, input filter coefficient , the greater the parameter value,the stronger the filter									
Fn__ 7A	**Name**	Input3 enter the digital filter	**Attribute**	Adjustable	**Association Mode**	P	S	T	
	Range	0~1000	**Unit**	125us	**Factory Setting**				
Digital input port 3, input filter coefficient , the greater the parameter value,the stronger the filter									
Fn__ 7B	**Name**	Input4 enter the digital filter	**Attribute**	Adjustable	**Association Mode**	P	S	T	
	Range	0~1000	**Unit**	125us	**Factory Setting**				
Digital input port 4, input filter coefficient , the greater the parameter value,the stronger the filter									
Fn__80	**Name**	Speed feedback low-pass filter time constant	**Attribute**	Adjustable	**Association Mode**	P	S	T	
	Range	32~1024	**Unit**		**Factory Setting**	824			
Speed feedback low-pass filter time constant, the smaller the parameter, the stonger the filter									
Fn__81	**Name**	External analog speed command low-pass filter time constant	**Attribute**	Adjustable	**Association Mode**		S		
	Range	32~1024	**Unit**		**Factory Setting**	824			
analog speed command low-pass filter time constant, the smaller the parameter, the stronger the filter									
Fn__82	**Name**	maximum speed	**Attribute**	Adjustable	**Association Mode**	P	S	T	
	Range	-6000~6000	**Unit**	rpm	**Factory Setting**	6000			
When the motor feedback speed is greater than the set value of the Fn_82, the speed command is in the range of（- Fn_82，Fn_82）									
Fn__83	**Name**	the third speed loop gain	**Attribute**	Adjustable	**Association Mode**		S		
	Range	1~1000	**Unit**		**Factory Setting**	100			
The third speed loop regulator parameter: it is valid in the position control mode and Fn_A5 = 3									
Fn__84	**Name**	The third speed loop integral gain	**Attribute**	Adjustable	**Association Mode**		S		
	Range	0~1000	**Unit**		**Factory Setting**				

The third speed loop regulator parameter: it is valid in the position control mode and Fn_A5 = 3									
Fn__85	**Name**	External analog speed command input zero speed threshold	**Attribute**	Adjustable	**Associati on Mode**		S		
	Range	0~1000	**Unit**	rpm	**Factory Setting**	0			
When the external analog speed command is less than the set value of the Fn_85, the drive speed command is 0.									
Fn__86	**Name**	Speed loop immunity coefficient	**Attribute**	Adjustable	**Associati on Mode**		S		
	Range	0~2048	**Unit**		**Factory Setting**	1024			
The speed loop immunity coefficient is valid when Fn_88 = 1. The smaller the value of the Fn_86, the stronger the immunity in steady state.									
Fn__87	**Name**	Speed loop derivative gain	**Attribute**	Adjustable	**Associati on Mode**		S		
	Range	0~1000	**Unit**		**Factory Setting**	0			
The larger the parameter value, the faster the response. But the parameter value is too large, it will be easy oscillation.									
Fn__88	**Name**	Speed loop algorithm selection	**Attribute**	Adjustable	**Associati on Mode**		S		
	Range	0~2	**Unit**		**Factory Setting**	0			
0：PID，1：PDFF，2：PDF									
Fn__89	**Name**	Zero velocity reaches the filter time constant	**Attribute**	Adjustable	**Associati on Mode**	P	S	T	
	Range	2~2000	**Unit**		**Factory Setting**	2			
the greater the parameter, the stronger the filter.									
Fn__8A	**Name**	Speed loop differential low-pass filter time constant	**Attribute**	Adjustable	**Associati on Mode**		S		
	Range	32~1024	**Unit**		**Factory Setting**	1024			
The smaller the parameter, the smoother the speed loop differential output.									
Fn__8B	**Name**	Number of the Ec alarm thresholds	**Attribute**	Adjustable	**Associati on Mode**	P	S	T	
	Range	10~1000	**Unit**		**Factory Setting**	100			
When the consecutive errors from the motor encoder exceeds the set value of Fn_8B, the drive will alarm “Er_Ec”.									
Fn__8C	**Name**	retention	**Attribute**	Adjustable	**Associati on Mode**	P	S	T	
	Range	0~80	**Unit**		**Factory Setting**				
Factory retention									
Fn__8D	**Name**	retention	**Attribute**	Adjustable	**Associati on Mode**	P	S	T	

	Range	0~80	**Unit**		**Factory Setting**				
Factory retention									
Fn__8E	**Name**	retention	**Attribute**	Adjustable	**Association Mode**	P	S	T	
	Range	0~80	**Unit**		**Factory Setting**				
Factory retention									
Fn__8F	**Name**	retention	**Attribute**	Adjustable	**Association Mode**	P	S	T	
	Range	0~80	**Unit**		**Factory Setting**				
Factory retention									
Fn__90	**Name**	External analog torque command low-pass filter time constant	**Attribute**	Adjustable	**Association Mode**			T	
	Range	32~1024	**Unit**		**Factory Setting**	824			
The smaller the parameter, the stronger the filter									
Fn__91	**Name**	The speed restriction signal selection in torque mode	**Attribute**	Adjustable	**Association Mode**			T	
	Range	0~1	**Unit**		**Factory Setting**	1			
0：external analog speed restriction 1：internal speed restriction									
Fn__92	**Name**	The first internal speed restriction in torque mode	**Attribute**	Adjustable	**Association Mode**			T	
	Range	-6000~6000	**Unit**	rpm	**Factory Setting**	100			
The first internal speed restriction in torque mode									
Fn__93	**Name**	The second internal speed restriction in torque mode	**Attribute**	Adjustable	**Association Mode**			T	
	Range	-6000~6000	**Unit**	rpm	**Factory Setting**	200			
The second internal speed restriction in torque mode									
Fn__94	**Name**	The third internal speed restriction in torque mode	**Attribute**	Adjustable	**Association Mode**			T	
	Range	-6000~6000	**Unit**	rpm	**Factory Setting**	300			
The third internal speed restriction in torque mode									
Fn__95	**Name**	The forth internal speed restriction in torque mode	**Attribute**	Adjustable	**Association Mode**			T	

	Range	-6000~6000	**Unit**	rpm	**Factory Setting**	400			
The forth internal speed restriction in torque mode									
Fn__96 ～ Fn__A2	**Name**	retention	**Attribute**	Adjustable	**Association Mode**	P	S	T	
	Range	0~1000	**Unit**		**Factory Setting**				
retention									
Fn__A3	**Name**	Position curve, maximum speed value	**Attribute**	Adjustable	**Association Mode**	P			
	Range	-6000~6000	**Unit**	rpm	**Factory Setting**				
The position curve is corresponding to the maximum speed value in position control mode.									
Fn__A4	**Name**	retention	**Attribute**	Adjustable	**Association Mode**	P	S	T	
	Range	0~1000	**Unit**		**Factory Setting**				
retention									
Fn__A5	**Name**	Position curve, smoothing filter algorithm selection	**Attribute**	Adjustable	**Association Mode**	P			
	Range	0~3	**Unit**		**Factory Setting**	0			
Position command smoothing filter algorithm selection in position control mode									
Fn__A6	**Name**	The third speed loop gain switch delay time	**Attribute**	Adjustable	**Association Mode**		S		
	Range	0~1000	**Unit**	1ms	**Factory Setting**	1000			
In position control mode, the motor will switch to the third speed loop gain delay time after stops.the parameter is valid when Fn_A5 = 3.									
Fn__A7	**Name**	Position command feedback decoupling proportionality coefficient	**Attribute**	Adjustable	**Association Mode**	P			
	Range	0~1024	**Unit**		**Factory Setting**	0			
The greater the parameter, the stronger the feedback in position control mode.									
Fn__A8	**Name**	Position command feedforward decoupling smoothing filter coefficient	**Attribute**	Adjustable	**Association Mode**	P			
	Range	32~1024	**Unit**		**Factory Setting**	512			
the parameter value is smaller, the filtering effect is more obvious in position control mode.									

Fn__A9	**Name**	Position command feedforward decoupling algorithm selection	**Attribute**	Adjustable	**Association Mode**	P			
	Range	0~1	**Unit**		**Factory Setting**	0			
0：conventional algorithm，1：improved algorithm									
Fn__AA ～ Fn__AC	**Name**	retention	**Attribute**	Adjustable	**Association Mode**	P	S	T	
	Range	0~1000	**Unit**		**Factory Setting**				
retention									
Fn__AD	**Name**	The second electronic gear ratio	**Attribute**	Adjustable	**Association Mode**	P			
	Range	1~9999	**Unit**		**Factory Setting**	1			
4×Motor encoder feedback pulse frequency＝command pulse frequency×Fn__AD/Fn__10。 The ratio of the Fn__AD/Fn__10 is required between 1/100 to 100.									
Fn__AE	**Name**	The third electronic gear ratio	**Attribute**	Adjustable	**Association Mode**	P			
	Range	1~9999	**Unit**		**Factory Setting**	1			
4×Motor encoder feedback pulse frequency＝command pulse frequency×Fn__AE/Fn__10。 The ratio of the Fn__AE/Fn__10 is required between 1/100 to 100.									
Fn__AF	**Name**	The forth electronic gear ratio	**Attribute**	Adjustable	**Association Mode**	P			
	Range	1~9999	**Unit**		**Factory Setting**	1			
4×Motor encoder feedback pulse frequency＝command pulse frequency×Fn__AF/Fn__10。 The ratio of the Fn__AF/Fn__10 is required between 1/100 to 100.									
Fn__B0 ～ Fn__EF	**Name**	Retention	**Attribute**	Adjustable	**Association Mode**	P	S	T	
	Range	0~1000	**Unit**		**Factory Setting**				
retention									
Fn__F0	**Name**	Number of the OC alarm threshold	**Attribute**	Read-only	**Association Mode**	P	S	T	
	Range	1~30000	**Unit**		**Factory Setting**	20			
When the drive overcurrent times exceed the set value of the Fn_F0, the drive will alarm “Er_Oc”. The smaller the parameter, the more sensitive the overcurrent protection. But there may be a false alarm.									
Fn__F1	**Name**	OC alarm level width threshold	**Attribute**	Read-only	**Association Mode**	P	S	T	
	Range	1~2000	**Unit**		**Factory Setting**	10			
When the drive overcurrent detection level width exceed the set value of the Fn_F1, it thought to be once overcurrent. The smaller the parameter, the more sensitive the overcurrent protection. But there may be a false alarm.									

Fn__F2 ～ Fn__FF	**Name**	Retention	**Attribute**	Adjustable	**Association Mode**	P	S	T	
	Range	0~1000	**Unit**		**Factory Setting**				
Retention									

Chapter Ⅶ Fault Alarm and Treatment

The alarm code Er of the servo driver indicates the cause of current failure of the driver.

Fault Display	Interpretation	Failure Causes	Solutions
Er oc	Overcurrent	Current passing through the power circuit of the servo driver is greater than a predetermined value: a. The driver is damaged. b. Motor connections U, V or W, a winding or a casing has a short circuit c. Motor damage d. Automatic protection of the power module e. Servo motor shake vigorously	Disconnect the motor wiring, when the motor just enters the servo enabled after being powered on, if an "oc" alarm appears, the drive is damaged and can be replaced with one of the same specifications; cut off the power, check the motor connections U, V and W, and measure whether the insulation resistance between the motor connections and the casing is correct; measure the resistance of three phases of the motor, if unbalanced, the motor is damaged and needs to be replaced; and re-adjust the servo gain parameters, to make the servo motor run smoothly.
Er oU	Power supply overvoltage	a. Power supply voltage is too high b. The drive voltage measurement circuit fails	Check the power supply voltage; Check the bleeder resistor; Return-to-factory repair
Er UU	Power supply undervoltage	a. Power supply voltage is too low b. The drive voltage measurement circuit fails	Check the power supply voltage; Return to factory for repair
Er Ec	Encoder ABZ alarm	a. Encoder wiring fault b. Encoder damage c. Severe noise interference	Confirm that the encoder wiring is reliable and accurate; Return to factory for repair Keep away from high-current (or high-voltage supply line) for wiring
Er EH	Encoder UVW alarm	a. Encoder wiring fault b. Encoder damage c. Severe noise interference	Confirm that the encoder wiring is reliable and accurate; Return to factory for repair Keep away from high-current (or high-voltage supply line)

Fault Display	Interpretation	Failure Causes	Solutions
			for wiring
Er_oL	Overload	The motor runs in the state that the torque exceeds its rated torque for a long time: a. Excessive load b. Motor oscillation c. The motor stays in the state that the mechanical brake is not released d. Connections of the motor and its encoder are incorrect or loose	Increase the driver and motor capacity, and re-adjust the gain; Check whether the mechanical brake is loosened; Check and confirm that the encoder and the motor shaft are securely connected
Er_St	Stall	The motor speed is too high: 1.2 times more than the rated speed	Command of speed reduction; Properly adjust the input command pulse frequency
Er_PE	Position tolerance	The position tolerance exceeds the set value F1d: a. Position command input frequency is too high b. Position loop gain is too small c. The position tolerance setting F1d is too small d. The motor or encoder wiring is incorrect a. e. The motor torque is insufficient or the load is excessive	Properly adjust the input command pulse frequency Re-adjust the related gain, such as F17, F11, etc.; Re-adjust the position tolerance setting F1d; Correct the motor and encoder cable wiring; Replace with a high-power motor or reduce the load
Er_Ic	ADC zero alarm	The motor current feedback channel ADC zero point is abnormal	Return to factory for repair
Er_PA	Parameter reading is unusual	Configuration parameter reading is unusual	Return to factory for repair
Er_tH	Instantaneous discharge alarm	Instantaneous discharge power is too high	Change the driver; Check the network pressure of the power supply
Er_oH	Average discharge alarm	Average discharge power is too high	Select an appropriate regenerative discharge resistor; Change the driver;

Fault Display	Interpretation	Failure Causes	Solutions
Er_Ao	Phase loss of power supply	Phase loss of 3-phase power supply input The 3-phase power supply voltage is too low	Check the 3-phase power supply wiring and voltage values
Er_dE	Power voltage alarm	Power supply voltage is too low	Check the 3-phase power supply wiring and voltage values
Er_FE	FPGA configuration alarm	FPGA configuration is not finished	Return to factory for repair
Er_Id	Redefinition of the input port	Duplicate function definition of the input port of 8-channel	Check the function definition register at the input port
Er_cE		The communication is timeout when bus control is adopted: a. Contact failure or damage of the communication cable b. Noise interference c. Address encoding is incorrect	Confirm that the cable wiring is reliable and accurate; Shorten the communication cable wiring, make wiring in strict accordance with the wiring requirements, and see "3.6 Cable Specifications"
_____	Panel communication error	Abnormal communication between the control panel of the driver and DSP: a. Contact failure or damage of the communication cable b. Noise interference c. The panel module or the DSP communication interface is damaged	Return to factory for repair

Fault Symptom	Failure Causes	Solutions
Inaccurate positioning in the position mode	a. The position pulse given line or the encoder feedback line is too long, and the shielded line is not grounded b. When the electrical noises are strong or the motor drive power is higher, the position pulse is not the standard differential output, and the single-direction given method or the OC gate given method is selected c. The control line of the driver or the feedback line of the encoder is in mixed wiring with the power line d. The board of the upper computer has poor immunity in an environment with high current	1) The position pulse given line or the encoder feedback line should be as short as possible, the shielded line should be grounded in strict accordance with the instructions, and the diameter of the control line should be increased. 2) The power isolation transformer and the power supply filter should be adopted to suppress power supply noises, the pulse output should adopt differential output mode, and the OC gate or single-direction given method at the output end should be converted to the differential given method. 3) The power line and the control line should be separately wired, and the control line should adopt a shielded line and should be grounded in strict accordance with the standards
Uneven speed in the speed mode	The speed given line is interfered by noises	1) The given line should be as short as possible, the diameter of the signal line should be increased, and the shielded line should be grounded in strict accordance with the standards. 2) The driver and the motor casing are grounded in accordance with the standards. 3) The zero speed clamp is adopted when the motor is stationary. 4) The power supply of the upper computer power adopts isolated power.